To remove an A type blade, press inward on the tab (Fig. 16) and pull the blade from the arm.

To install a new blade assembly, slide the blade saddle over the end of the wiper arm so that the locking stud snaps into place.

Side Saddle Pin Type

To remove a pin type T-type blade, insert an appropriate tool into the spring release opening of the blade saddle, depress the spring clip and pull the blade from the arm (Fig. 17).

To install, push the blade saddle on to the pin, so that the spring clip engages the pin (Fig. 17). Be sure the blade is securely attached to the arm.

ARM AND BLADE ASSEMBLY-TO-PIVOT SHAFT

Econoline

Raise the blade end of the arm off of the windshield and move the slide latch (Fig. 17) away from the pivot shaft. This will unlock the wiper arm from the pivot shaft and hold the blade end of the arm off of the glass at the same time. The wiper arm can now be pulled off of the pivot shaft without the aid of any tools. Disconnect the washer hose at the wiper arm head.

To install, connect the washer hose at the wiper arm head and push the main arm head over the pivot shaft. Be sure that the pivot shaft is in park position, (refer to Adjustments), and that the blade assembly is positioned to the correct dimension. Hold the main arm head on to the pivot shaft while raising the blade end of the wiper arm and push the slide latch into the lock under the pivot shaft. Then, lower the blade to the windshield. If the blade does not touch the windshield, the slide latch is not completely in place.

C-,L-, and W-Series Trucks

Remove the arm and blade assembly from the pivot shaft by removing the retaining nut and star washer (Fig. 18). Install the assembly as shown and tighten the retaining nut to 75-100 ft-lb.

RUBBER ELEMENT TO WIPER BLADE

The rubber element in all blades can be replaced.

A-Type

To remove, depress the latch pin and slide the element out of the yoke jaws (Fig. 19).

To install, slide the element through the yoke jaws and insert the blade frame assembly into the slots of the yoke jaws.

T-Type

To remove, squeeze the latch lock release and pull the element out of the lever jaws (Fig. 19).

To install, insert the new element through each of the lever jaws. Be sure the element is engaged in all of the lever jaws.

If the arm or blade assembly is bent or distorted, replace the complete blade assembly.

PIVOT SHAFT AND LINKAGE

Bronco

Remove the windshield wiper arm and blade assemblies from their pivot shafts. Disconnect the linkage arm from the motor drive arm by removing the retaining clip. THE RIGHT AND LEFT PIVOT SHAFT ASSEMBLIES ARE EACH RETAINED TO THE WINDSHIELD HEADER BY TWO MOUNTING SCREWS and

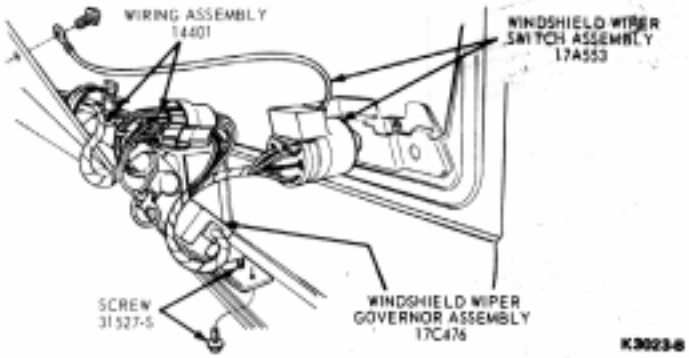

FIG. 14 Windshield Wiper Intermittent Governor

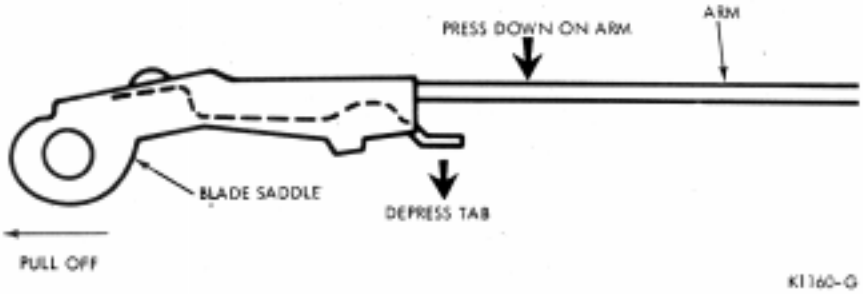

FIG. 15 T Blade—Bayonet Type Removal

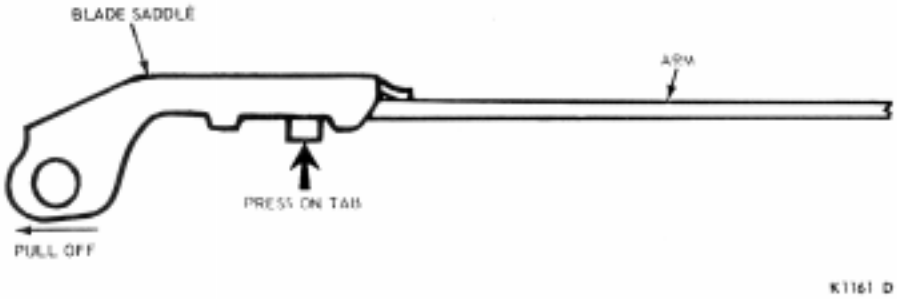

FIG. 16 A Blade—Bayonet Type Removal

OCTAGONAL NUT. Remove these mounting screws and nut, and remove the pivot shafts and linkage as an assembly.

Econoline

Removal

1. Disconnect the battery ground cable.
2. Remove the wiper blade and arm assembly from the pivot shaft and disconnect the washer hose (Fig. 11).
3. Remove the cowl grille.
4. Remove the clip securing the left and right hand linkage and the clip from the wiper motor arm.
5. Remove three pivot body-to-cowl panel screws and remove the arm and pivot shaft assembly.

Installation

1. Position the arm and pivot shaft assembly to the cowl panel and install the three attaching screws.

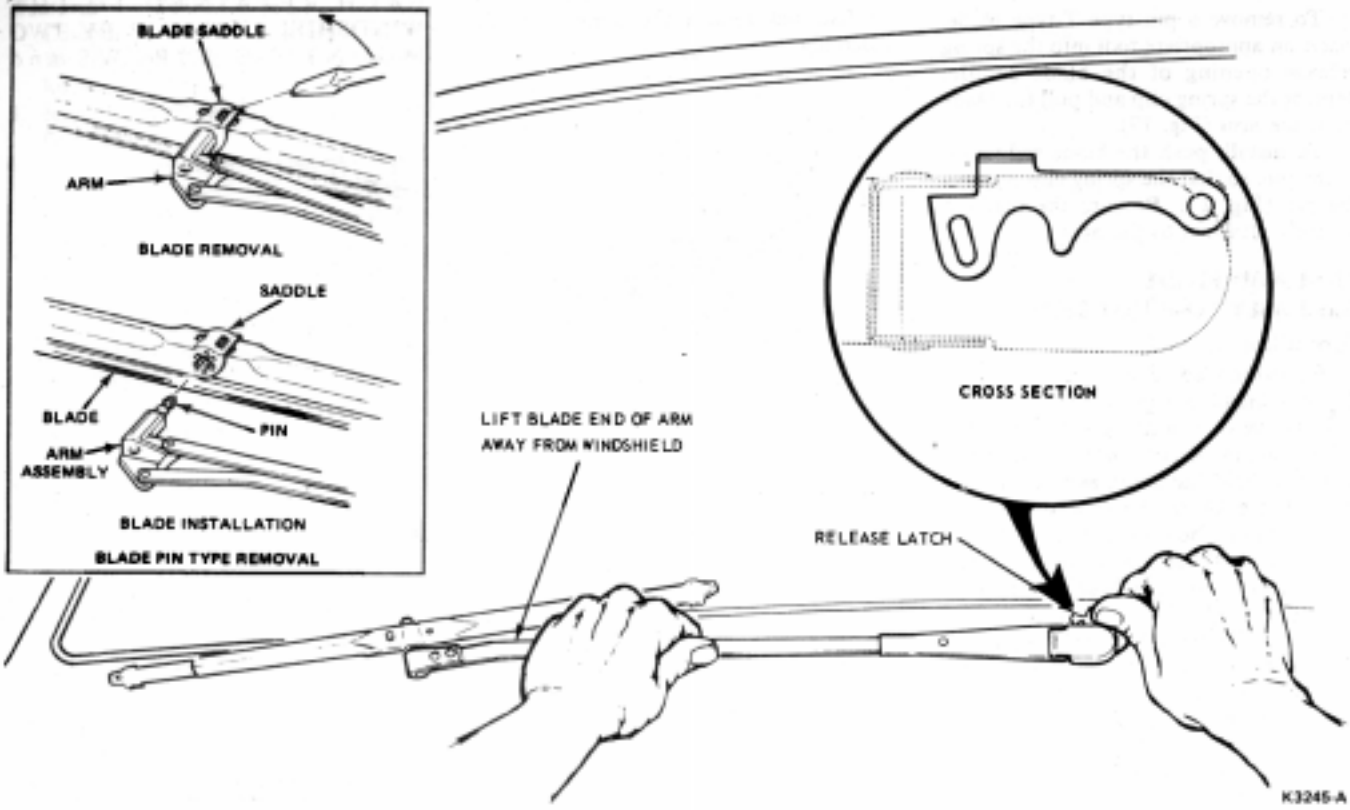

FIG. 17 Side Saddle Pin Type-Econoline

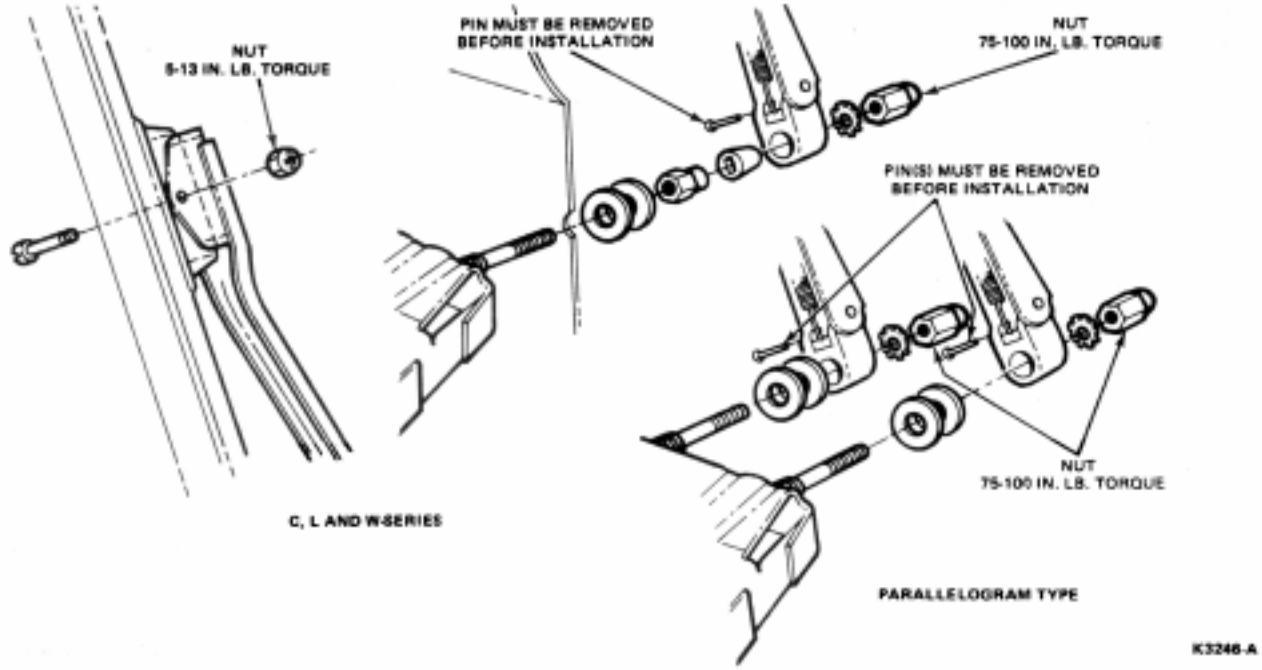

FIG. 18 Arm and Blade Assembly Installation—C-,L-,and W-Series Trucks

OCTAGONAL NUT. Remove these mounting screws and nut, and remove the pivot shafts and linkage as an assembly.

Econoline

Removal

1. Disconnect the battery ground cable.
2. Remove the wiper blade and arm assembly from the pivot shaft and disconnect the washer hose (Fig. 11).
3. Remove the cowl grille.
4. Remove the clip securing the left and right hand linkage and the clip from the wiper motor arm.
5. Remove three pivot body-to-cowl panel screws and remove the arm and pivot shaft assembly.

Installation

1. Position the arm and pivot shaft assembly to the cowl panel and install the three attaching screws.

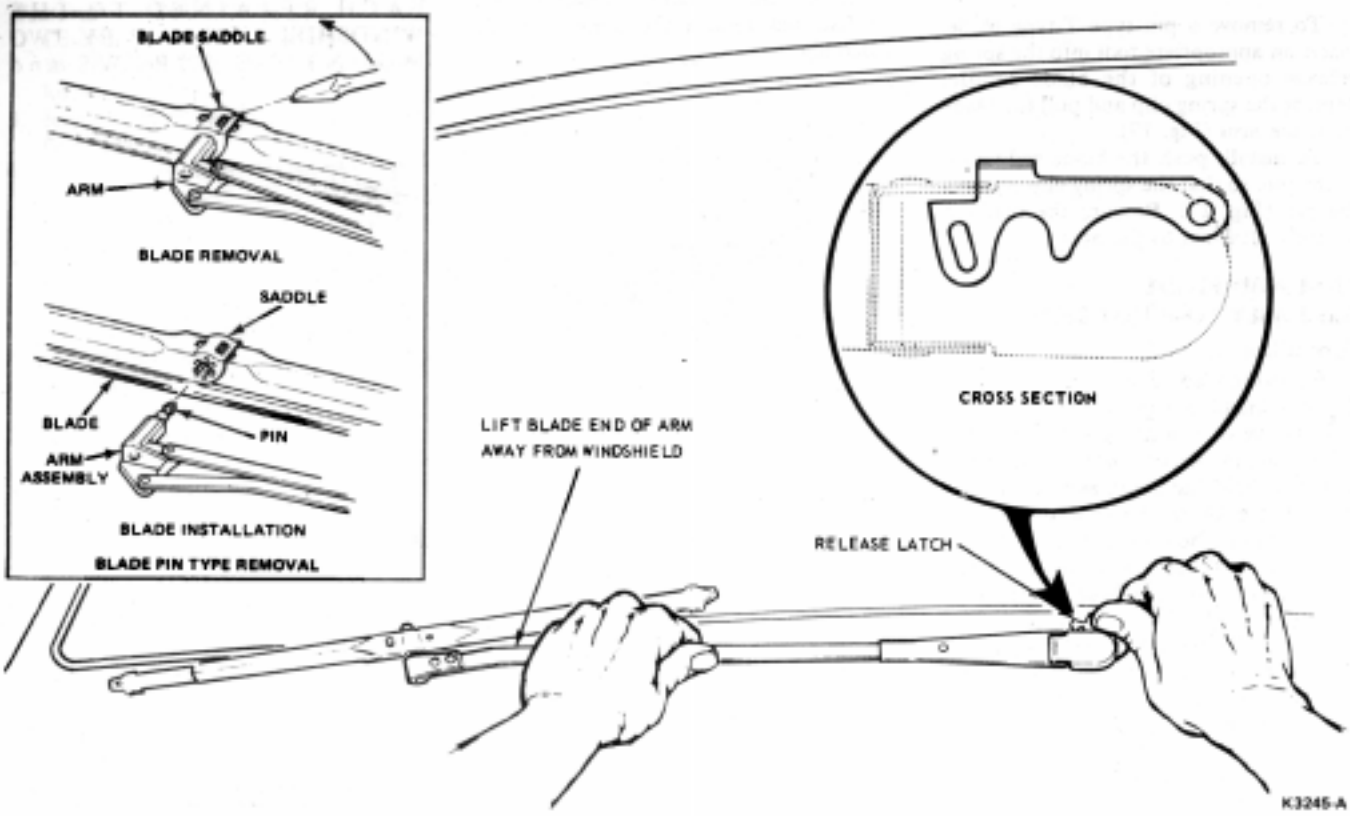

FIG. 17 Side Saddle Pin Type-Econoline

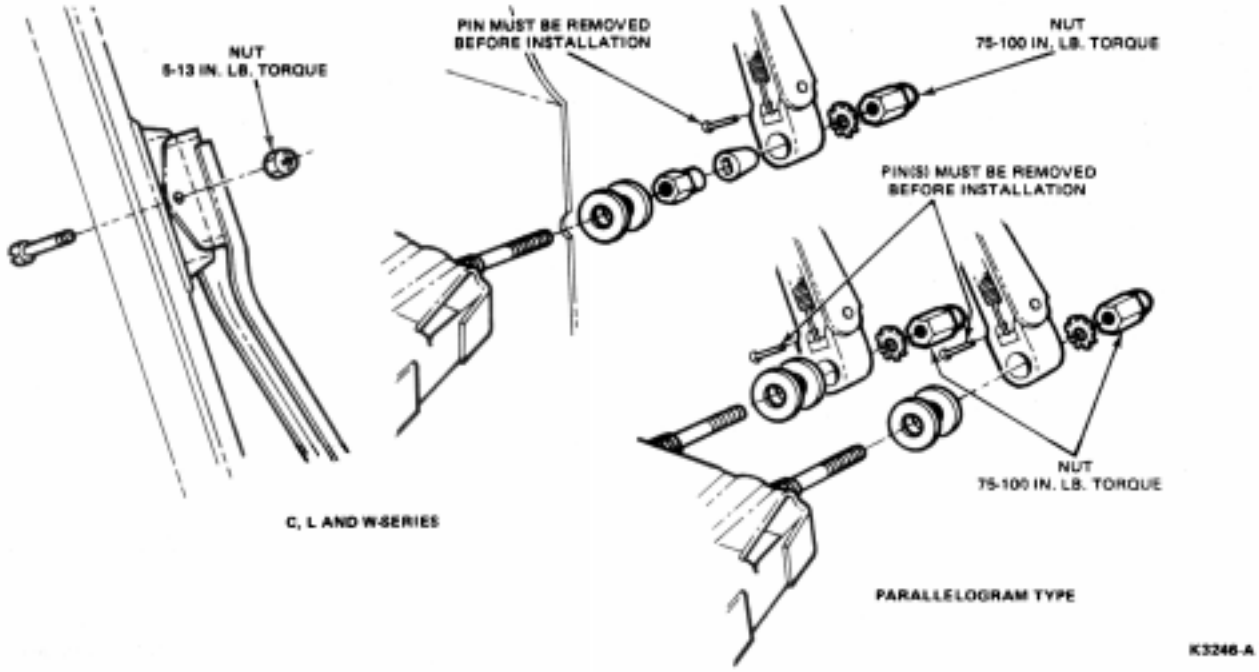

FIG. 18 Arm and Blade Assembly Installation—C-,L-,and W-Series Trucks

WIPER MOTOR

Except L-Series and Econoline

Disassembly

1. Remove the gear cover retaining screws, ground terminal and cover (Fig. 20).
2. Remove the idler gear by pressing shaft with retainer out of the motor housing.
3. Remove the motor through bolts, motor round case, switch terminal insulator sleeve, and armature. Do not pound the motor case magnet assembly as the ceramic magnets may be damaged.
4. Mark the position of the output arm with respect to the output shaft for assembly. Remove the output arm retaining nut, output arm, wave washer, flat washer, O-ring, leaf spring, output gear/shaft assembly, and parking switch lever and parking switch lever plate.
5. Remove the brushes, brush springs, and wire harness.
6. Remove the brush plate and switch assembly, and remove the switch contact to parking lever pin from the gear housing.

Assembly

It is essential that the idler gear shaft with the push-nut be re-set to the original, proper depth in the gear housing.

1. Place the housing on a flat surface with the inside of the housing facing up.
2. Position the parking switch lever and lever plate with the cam rider pointing toward the gear housing output shaft hole.
3. Apply a film of Sun Prestige grease to the output gear teeth and shaft bearing surface. Insert the shaft in the bearing. Make certain that the parking switch lever is clear of the cam and gear assembly.
4. After installing idler gear on shaft insert shaft through park lever and plate. Use a drift and hammer to lightly tap the gear and pinion shaft to proper depth. (Do not allow push-nut to put a pre-load on gear. A .001-.007 in clearance is required.)
5. Position the brush springs and brushes in the holders and wrap wire around them to hold them in the fully retracted position. Push the insulated brush connector into the switch terminal.
6. Place the switch contact to parking lever pin in the gear housing. Position the brush plate assembly to the housing and install the retaining screws.
7. Apply Sun Prestige grease to the ball bearing in the end of the armature shaft. Position the armature shaft in the gear housing and remove the brush retracting wires.
8. Holding the armature in position, install the motor case and magnet assembly, and through bolts. Align indicator marks on motor case and gear box housing before inserting through bolts.
9. Apply Sun Prestige grease to the worm gear and pinion and idle gear. Install end play spring in housing.
10. Apply a generous amount of Sun Prestige grease to the area around the end of the armature shaft. Install the gear housing cover.

Cleaning and Inspection

1. Clean the gear housing of all old grease. Do not allow any cleaning fluid to contact the armature shaft and output shaft bearings.
2. Wipe all other parts with a clean cloth.
3. Inspect the gear housing for cracks or distortion. Replace a cracked or distorted housing.

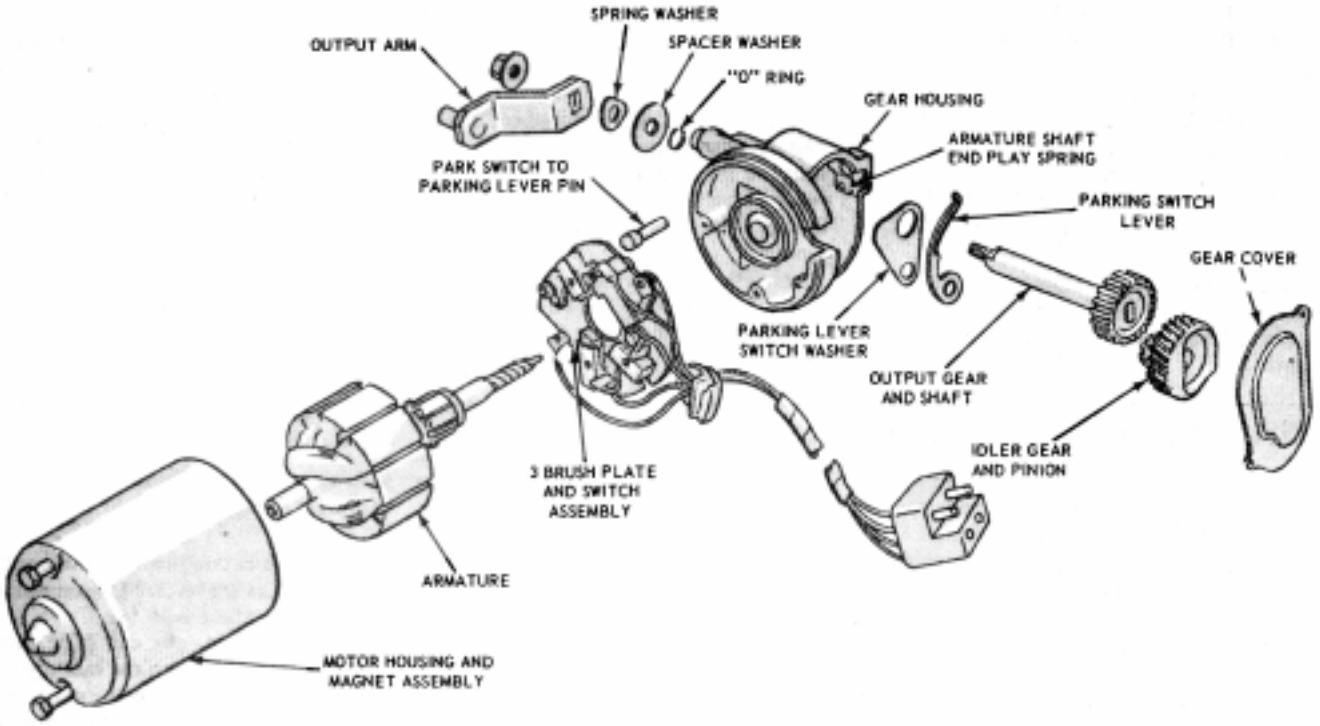

FIG. 20 Disassembled Wiper Motor

4. Check all shafts, bushings, and gears for scored surfaces. Replace damaged parts, and add new grease to the housing and gears.

SPECIFICATIONS

ELECTRIC WINDSHIELD WIPER MOTOR AND SWITCH TEST CURRENT LIMITS

Motor Type	Motor Current Draw Test	Circuit Breaker/Switch Low Current Pass Test	Circuit Breaker/Switch High Current Pass Test
Non-Depressed Park	2.5 amperes	7 amperes **6 amperes	14 amperes **12 amperes
Non-Depressed Park, Heavy Duty	3.5 amperes	8.25 amperes	16.5 amperes

*Motor maximum current when operated without linkage attached. **Mustang

CK2501-G