11. Remove the rear radio support nut and washer (Fig. 6).

Installation

1. Install the rear radio support washer and nut.
2. Position the radio to the instrument panel and install the four attaching screws (front of radio).
3. Install the radio mounting plate to the radio (two washers and nuts).
4. Connect the radio antenna lead to the radio and speaker wires to the connectors.
5. Position the right hand finish panel to the instrument panel and (snap-in) the two retaining clips (Fig. 6).
6. Install the finish panel attaching screws and name plate (if removed).
7. Install the radio discs and knobs.
8. Install the cigar lighter assembly (if removed).
9. Install the heater and A/C control knobs.
10. Connect the battery ground cable.
11. Check the operation of the antenna and adjust the antenna trimmer.

Bronco

Removal

1. Disconnect the radio lead wire at the fuse panel.
2. Disconnect the speaker leads at the receptacle on the underside of the radio chassis (Fig. 7).
3. Disconnect the antenna lead at the receptacle on the right side of the radio chassis.
4. Remove (pull) the volume control and the manual tuning control knobs from the shafts.
5. Remove the screws that retain the dial assembly to the instrument panel, and remove the dial assembly.
6. Remove the retaining nuts and the retaining plate that secure the radio to the instrument panel.
7. Remove the radio bottom support bracket retaining screw and remove the radio assembly from the instrument panel.

Installation

1. Position the radio to the inner side of the instrument panel, and install the right and left support bracket to radio retaining nuts (Fig. 7).
2. Position the retaining plate to the outer side of the instrument panel over the pilot light and control shafts, and install the retaining nuts.
3. Position the dial assembly, install the retaining screw, and seat the control knobs on the control shafts.
4. Connect the speaker leads, the antenna lead, and the radio power lead wire at the fuse panel.
5. Calibrate the dial pointer with the tuner by rotating the tuning knob until the dial pointer reaches the end of its travel at the right side of the dial.
6. Check the operation of the radio and adjust the antenna trimmer.

W-Series

Removal

1. Disconnect the battery ground cable.
2. Remove the control knobs and disc from the radio.
3. Remove the dial assembly attaching screws and remove the dial assembly (Fig. 4).
4. Remove the control shaft retaining nuts and remove the dial mounting plate.
5. Remove the console cover and disconnect the radio power lead, speaker leads, and the antenna lead-in cable.
6. Loosen the support bracket-to-radio retaining nut, and remove the radio.

Installation

1. Position the radio to the console and support bracket. Position the radio to fit flush against the console cover, and tighten the support bracket retaining nut (Fig. 4).
2. Connect the radio power lead, speaker leads, and the antenna lead-in cable.
3. Connect the battery ground cable.
4. Turn the radio ON and adjust the antenna trimmer, if required.
5. Install the console top cover.
6. Position the dial mounting plate over the control shafts and install the retaining nuts.
7. Install the dial assembly, disc, and knobs. Rotate the tuning control to the clockwise stop. This will align the dial pointer with the tuner.

RADIO SUPPRESSION EQUIPMENT

The radio suppression equipment used on the different models is shown in Figs. 8 thru 14. When replacing any radio suppression equipment components, be sure that a good contact is made at all attachments. Remove any paint or dirt from between a condenser and its ground. Tighten all nuts and bolts securely.

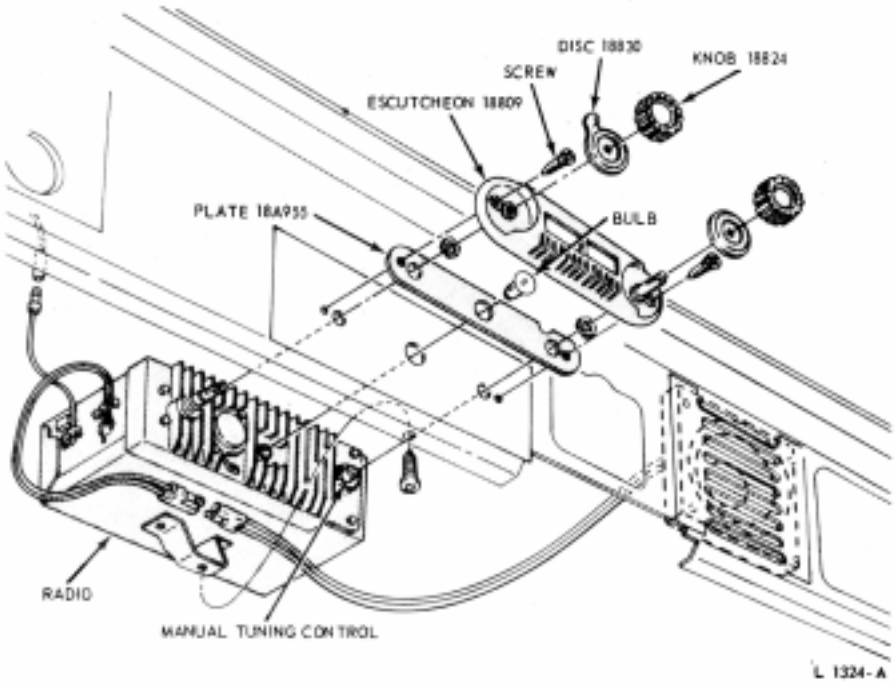

FIG. 7 Radio Installation—Bronco

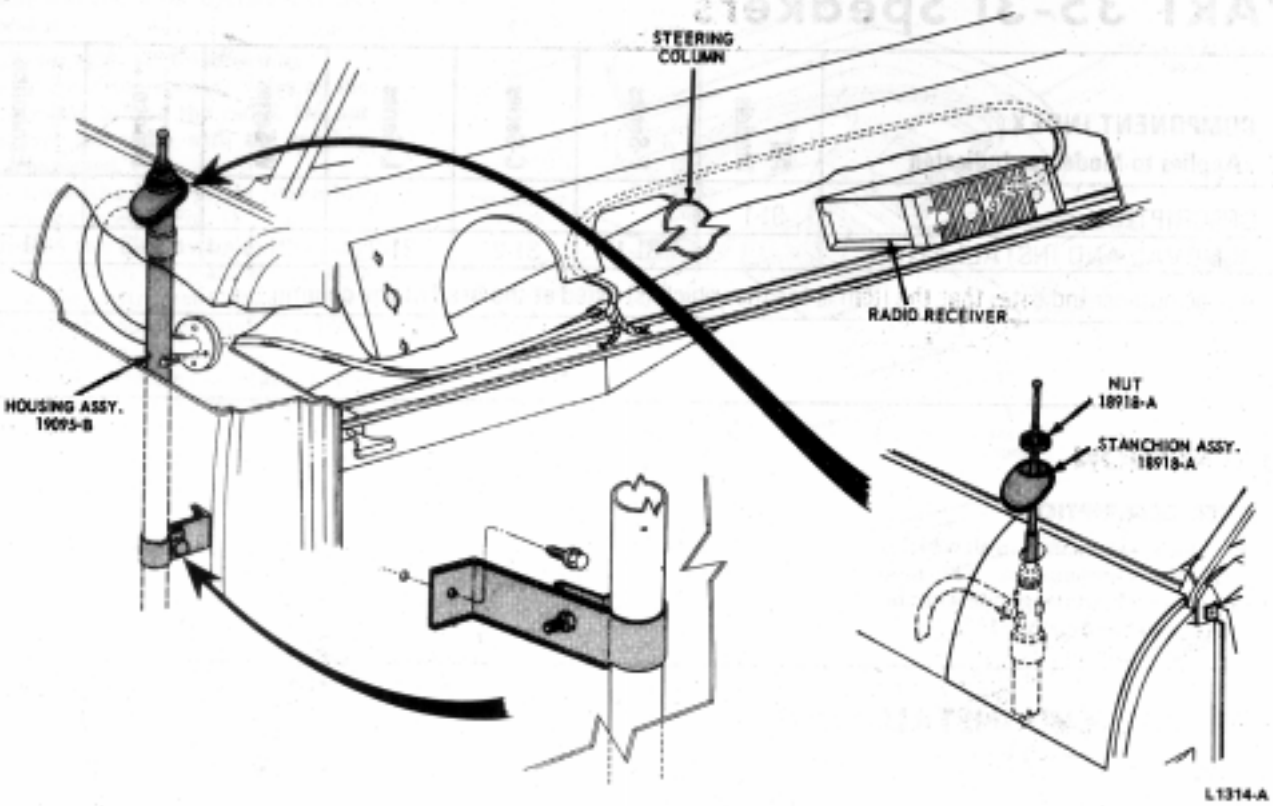

Fig. 7 Antenna Installation—Bronco