PART 36-22 Bronco Heating System

Applies To Bronco

COMPONENT INDEX	Page	COMPONENT INDEX	Page
ADJUSTMENTS		REMOVAL AND INSTALLATION	
Control Cables	22-3	Air Door Control Cable and Blower Switch Assembly	22-4
DESCRIPTION AND OPERATION		Blower Motor	22-3
Air Flow	22-1	Heater Core	22-3
Control Operation	22-1		

DESCRIPTION AND OPERATION

AIR FLOW

Outside air enters the heater assembly through an air duct in the right cowl, flows through the blower and the heater core fins into the plenum chamber, and discharges through the defroster nozzles and/or the floor outlet (Fig. 1).

When the blower is off, the air is forced through the system by the forward motion of the vehicle. When the blower is on, it increases the air flow by drawing the air from the inlet duct and forcing it through the heater core.

When hot engine coolant flows through the heater core, the air is heated as it passes through. When the heater water valve shuts off the flow of coolant through the core, the air passes through and discharges unheated for fresh air ventilation.

CONTROL OPERATION

The temperature (right) control (Fig. 2) operates a cable connected to the heater water valve (Fig. 1). Pushing the knob in closes the water valve, shutting off the flow of hot coolant from the engine through the heater core (no heat). Pulling the knob out opens the valve to allow flow of hot coolant through the core. The farther out the knob is pulled, the greater the coolant flow and the higher the temperature. At full out position, the water valve is wide open (maximum heat).

The center control knob performs two functions: it actuates a cable connected to the outside air door, and it controls the blower motor switch. Pulling the knob out opens the outside air door allowing outside air to flow through the heater core into the plenum chamber. Pushing the knob in shuts off air flow. With the knob turned left to OFF position, the blower is off and outside air is forced through the system by the forward motion of the vehicle only. Turning the knob to the right (HI or LO blower speeds) increases the flow of air through the system.

The heat/defrost (left) control knob actuates a cable connected to the heat/defrost door (Fig. 1). When the knob is pulled out, the door directs discharged air through the defroster nozzles to the windshield. When the knob is pushed in, the control door directs air through the floor outlet to the passenger compartment. Pulling the knob part way out, directs part of the discharge air to the windshield and part to the floor.

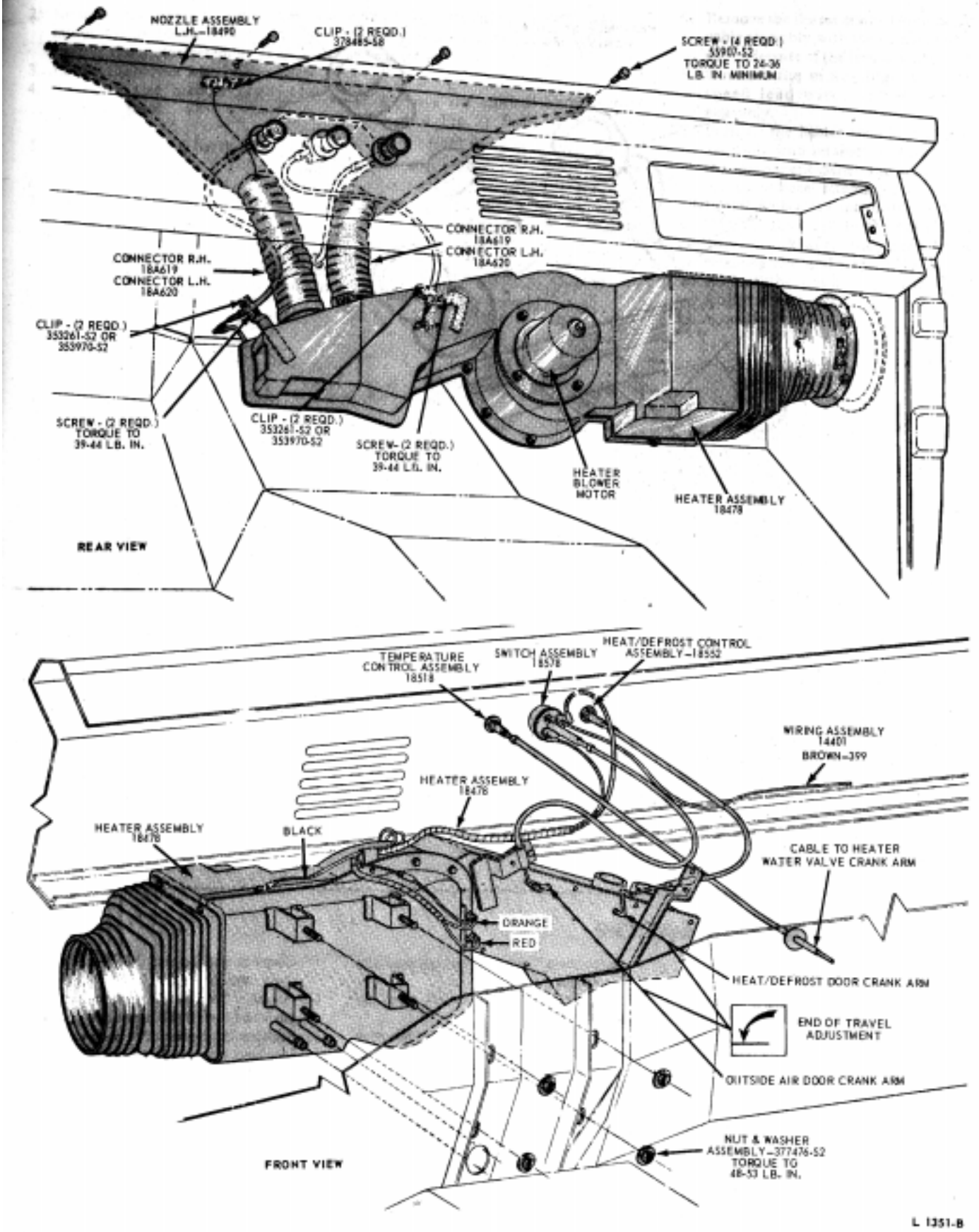

FIG. 1 Heater Installation—Bronco

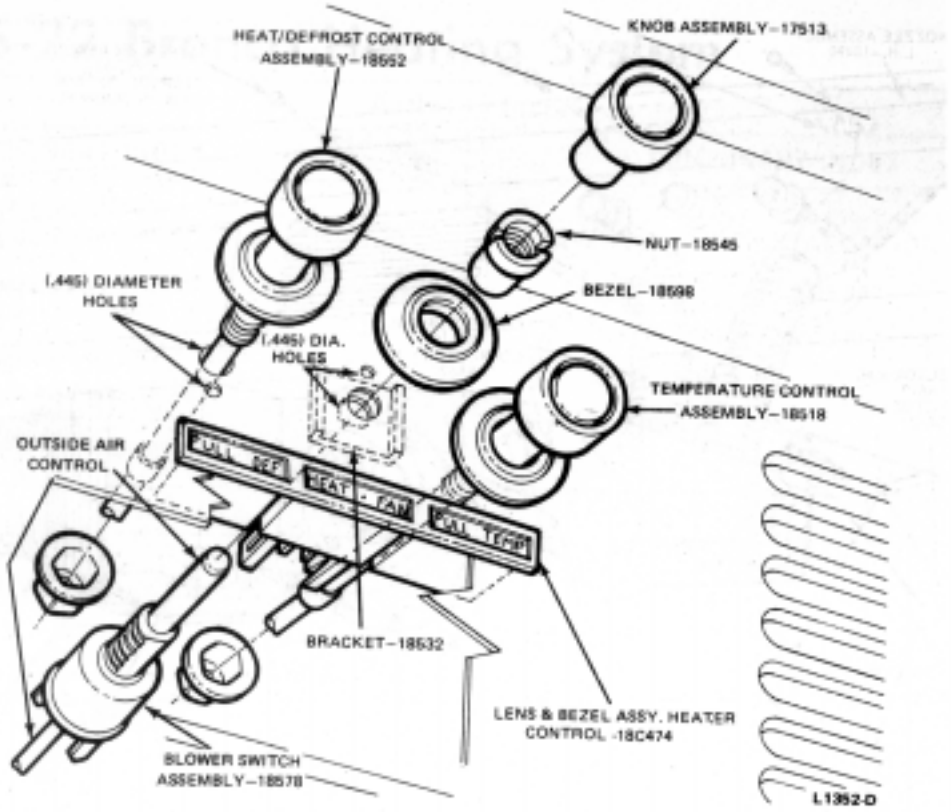

FIG. 2 Heater Controls—Bronco

ADJUSTMENTS

CONTROL CABLES

The heat/defrost door, outside air door, and water valve control cables must be adjusted so that the doors and valve are at the end of their travel when the control knobs are 1/16 to 1/8-inch from the end of their travel (fully pushed-in position).

Loosen the Bowden cable retaining clip screw at the air door or valve crank arm (Fig. 1). Move the cable housing back and forth until the crank arm is at the end of its travel as shown in Fig. 1 when the knobs are 1/16 to 1/8-inch from the fully pushed-in position. Then, tighten the retaining screw.

REMOVAL AND INSTALLATION

HEATER CORE

1. Drain the cooling system.
2. Disconnect both heater hoses at the heater (Fig. 1). Remove the rubber pads from the core.
3. Remove the nuts and star washers retaining the heater assembly to the dash panel.
4. Disconnect the right and left defroster hoses at the plenum.
5. Disconnect the fresh air inlet at the cowl. Rest the heater on the floor.
6. Disconnect the heat/defrost door cable at the door crank arm (Fig. 1).
7. Disconnect the outside air door cable at the crank arm.
8. Disconnect the electrical wires at the connector.
9. Remove the heater assembly from the vehicle.
10. Remove the screws retaining the rear cover. Remove the clip retaining the core in the case and remove the core.
11. Transfer the seals from the heater core to the new core.
12. Position the core in the case. Install the retaining clip. Position the cover and install the retaining screws.
13. Position the heater assembly on the floor in the vehicle. Connect the wire connectors.
14. Connect and adjust the outside air door control cable.
15. Connect and adjust the heat/defrost door control cable.
16. Position the heater assembly to the dash and install the nuts and washers.
17. Position the heater core pads over the core and connect both hoses.
18. Connect the defroster hoses and fresh air intake.
19. Fill the cooling system.
20. Check the heater operation and check for leaks.

HEATER BLOWER MOTOR

1. Disconnect the electrical connectors and the ground wire from the top of the heater.

2. Remove the screws retaining the motor to the plenum chamber, and remove the motor assembly (Fig. 1).
3. Loosen the blower wheel Allen screw.
4. Remove the motor from the mounting plate.
5. Install the motor to the mounting plate.
6. Install the blower wheel.
7. Position the motor to the plenum. Install the retaining screws.
8. Connect the electrical lead and the ground wire.
9. Check the operation of the blower.

OUTSIDE AIR DOOR CONTROL CABLE AND BLOWER SWITCH ASSEMBLY

1. Remove the control knob (center control, Fig. 2). Push up on the clip in the knob to remove it.
2. Remove the blower control switch bezel nut and the bezel (Fig. 2).
3. Disconnect the cable from the outside air door crank arm (retaining clip and screw).
4. Disconnect the motor high and low speed lead wires at the switch assembly.
5. Remove the heater control switch and cable assembly with the retainer from the underside of the instrument panel.
6. Connect the motor high and low speed lead wires to the switch assembly.
7. Position the heater switch and cable assembly with retainer to the back of the instrument panel and install the bezel and bezel retaining nut.
8. Install the heater control switch knob.
9. Connect the cable to the outside air door crank arm and install the retaining clip and screw (Fig. 1).
10. Adjust the cable as outlined in Adjustments.