1973/79 FORD CARS

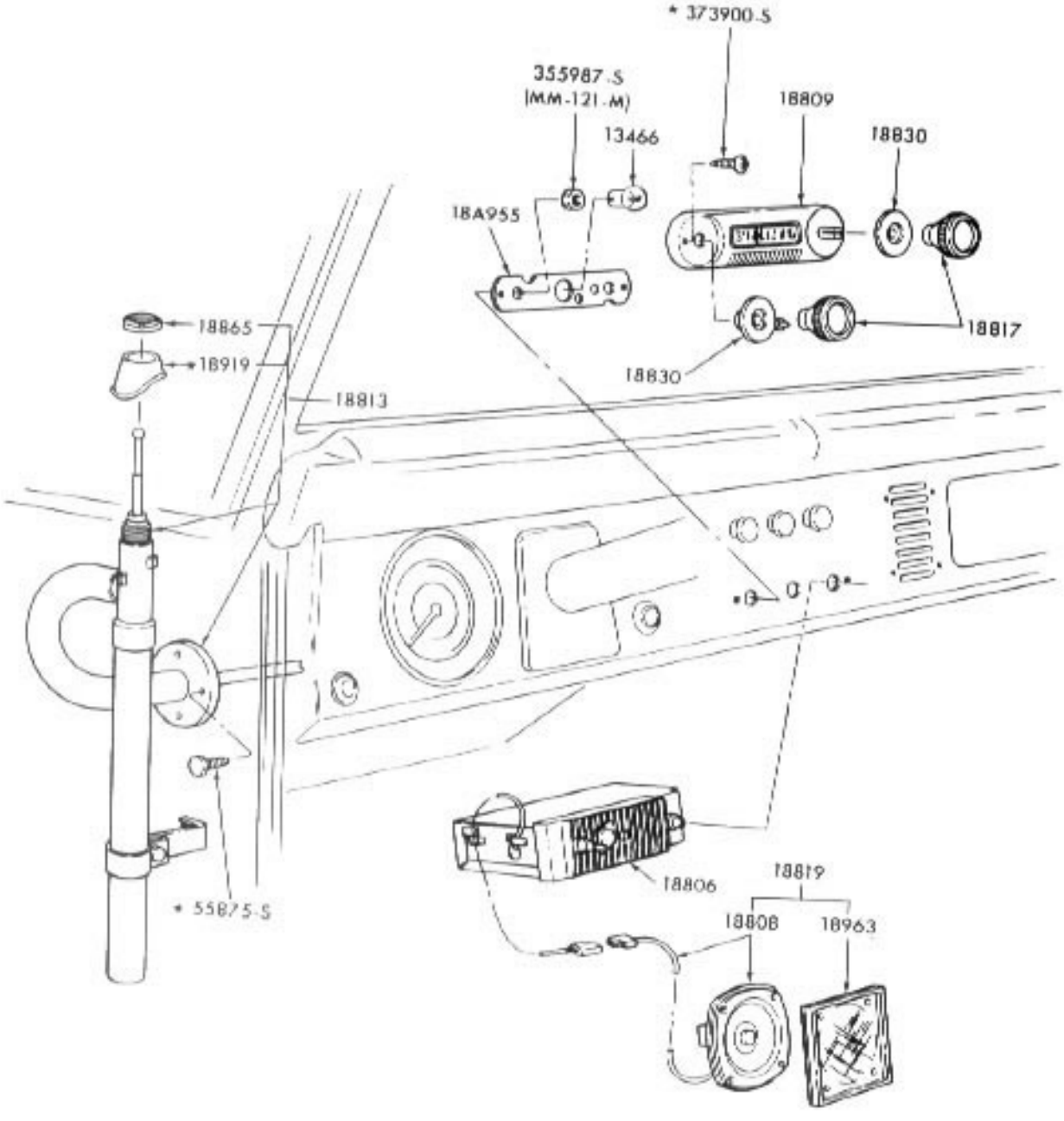

P 12918

RADIO and RELATED PARTS
1973/77 BRONCO