PART 34-31 Fuses and Circuit Breakers

COMPONENT INDEX Applies to Models as Indicated	MODEL APPLICATION										
	All Models	Bronco	Econoline	Parcel Delivery	F100-F-350	B-, F-500-750, F-6000, 7000D	C and CT Series	L-Series City Delivery	L-Series Line Haul	W-Series	W-Series C.B. Panel
GENERAL INFORMATION – FUSE PANELS	31-1										
CIRCUIT PROTECTION SPECIFICATIONS		31-7	31-7	31-7	31-8	31-8	31-9	31-9	31-8	31-10	31-9

A page number indicates that the item is for the vehicle(s) listed at the head of the column.

GENERAL INFORMATION

FUSE PANELS

Each vehicle has a fuse panel which contains most of the fuses used in the electrical system. The fuse panels are located in various positions depending upon the vehicle as shown in Figs. 1 through 8 which show the fuse panels for each vehicle line.

The circuit protection charts in Specifications of this Part give the location and values of all the circuits containing fuses or circuit breakers for the various vehicle lines.

Electrical Console—W-Series

An electrical console (Fig. 6) is located to the right of the driver's seat. This console consists of a series of in-line toggle switches and a circuit protection panel, both of which are mounted on a hinged cover. Two types of circuit protection panels are available: one type contains both fuses and circuit breakers and the other contains circuit breakers only.

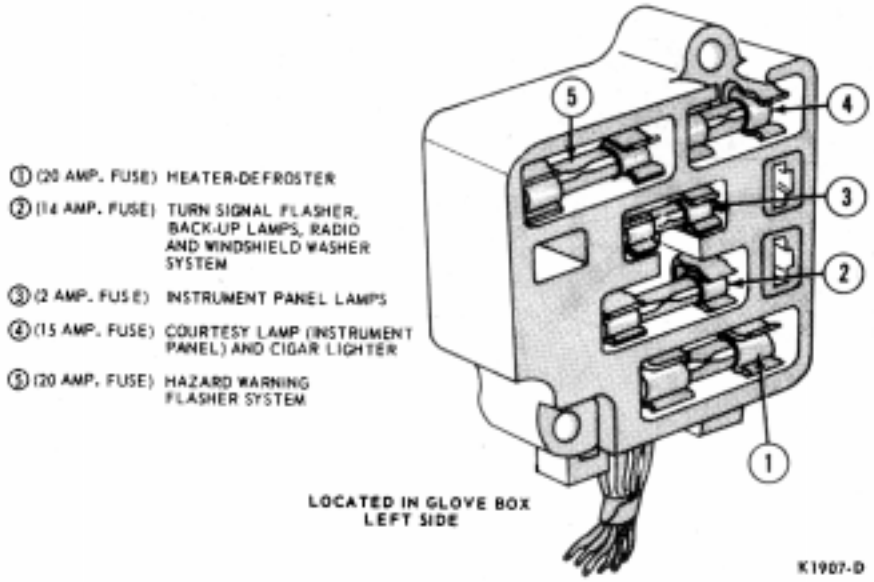

FIG. 1 Fuse Panel—Bronco

1. EMERGENCY FLASHERS AND STOP LAMPS – 20 AMP.
2. DOME-CARGO AND COURTESY LAMPS, CIGAR LIGHTER – 15 AMP.
3. ACCESSORY FEED – 15 AMP.
4. TURN SIGNAL AND BACK-UP LAMPS
5. RADIO – 7.5 AMP.
6. THROTTLE SOLENOID – 7.5 AMP.
7. SEAT BELT WARNING – 7.5 AMP.
8. INSTRUMENT PANEL AND CLUSTER LAMPS, ASH TRAY, TRANSMISSION INDICATOR LAMP, RADIO LAMP, HEATER, A/C LAMP, HEADLAMP AND WINDSHIELD WIPER ILLUMINATION – 3 AMP.
9. WINDSHIELD WIPER AND WASHER – 7.5 AMP. C/S
10. HEATER AND/OR A/C – 30 AMP.

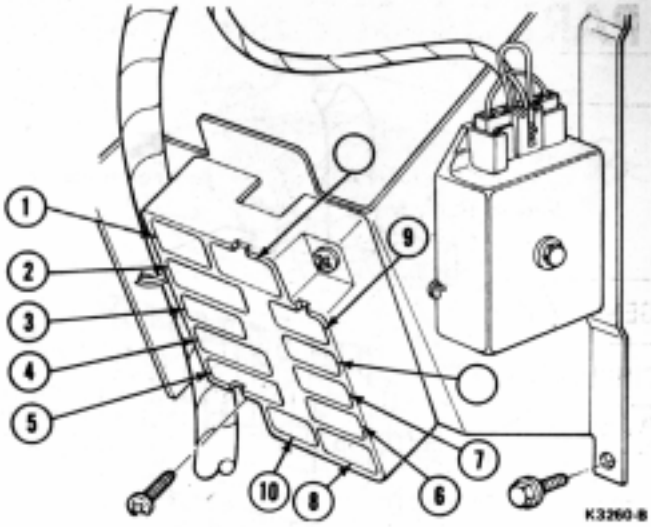

FIG. 2 Fuse Panel—Econoline

SPECIFICATIONS

CIRCUIT PROTECTION — BRONCO

Circuit	Location	Protective Device ①	Circuit	Location	Protective Device ①
Back-Up Lights, W/S Washer, Turn Signal and Radio	Fuse Panel	SFE 14	Heater	Fuse Panel	AFE 20
Dome, Courtesy, Map or Cargo Lights and Cigar Lighter	Fuse Panel	AGW 15	Horns, Park, License, Marker and Stop Lights ②	Headlight Switch	15 Amp. C.B.
Emergency Flasher System	Fuse Panel	SFE 20	Instrument Panel Light	Fuse Panel	AGA 2
Headlights	Headlight Switch	12 Amp. C.B.			

① Fuse or Circuit Breaker (C.B.) in Amperes.

② Under NO circumstances use more than an 8.5 ampere load across the ignition switch terminals for the rear light circuit on ANY truck or bus which uses the hydraulic stoplight switch.

CK2519-A

CIRCUIT PROTECTION – ECONOLINE

Circuit	Location	Protective Device ①	Circuit	Location	Protective Device ①
Air Conditioner	In Feed Line	8 AG or AGX	Emergency Flasher System and Stop Lights ②	Fuse Panel	AGX 20
Air Conditioner	Starter Motor Relay	16 Gauge Fuse Line	Fog Lights	In Feed Line	AGC 10
Alternator	Starter Motor Relay	16 Gauge Fuse Link	Headlights	Headlight Switch	12 C.B.
Alternator	Electric Choke	20 Gauge Fuse Link	Heater	Fuse Panel	AGC or SFE 20
Auxiliary Heater	In Feed Line	SFE 14	Instrument Panel Lights	Fuse Panel	AGA 2
Back-up Lights, Turn Signal, and Windshield Washer	Fuse Panel	SFE 14	Radio	In Feed Line	AGA 5
Dome, Courtesy, Map, Cargo Lights and Cigar Lighter	Fuse Panel	AGW 15	Spotlight	In Feed Line	SFE 7.5
Dual Batteries	Starter Motor Relay	14 Gauge Fuse Link	Tail, License, Parking, Marker Lights and Horns	Headlight Switch	15 C.B.
			Windshield Wiper System	Fuse Panel	7.5 Amp. C.B.

① Fuse or Circuit Breaker (C.B.) in Amperes.

② Under NO circumstance use more than an 8.5 ampere load across the ignition switch terminals for the rear light circuit on ANY truck or bus which uses the hydraulic stoplight switch.

CK2520-B

CIRCUIT PROTECTION–PARCEL DELIVERY

Circuit	Location	Protective Device ①	Circuit	Location	Protective Device ①
Dome Light	In Line (Hang On)	SFE 14	Horn, Tail, Park, License Marker & Stop Lights	Headlight Switch	12 Amp. C.B.
Emergency Flasher System	In Line (Hang On)	SFE 14	Instrument Panel Light	In Line (Hang On)	AGA 1
Headlights	Headlight Switch	12 Amp. C.B.	Turn Signal & Back-up Lights	In Line (Hang On)	AGC 10
Heater and Defroster	In Line (Hang On)	SFE 14	Windshield Wiper System	Integral with Wiper Switch	C.B.
			W/S Washer	In Line (Hang On)	AGC 10

① Fuse or Circuit Breaker (C.B.) in Amperes.

② Under NO circumstances use more than an 8.5 ampere load across the ignition switch terminals for the rear light circuit on ANY truck or bus which uses the hydraulic stoplight switch.

CK2521-B

CIRCUIT PROTECTION – F-100, F-350

Circuit	Location	Protective Device ①
Air Conditioner and/or Heater Comb. 30 Amp.	Starter Motor Relay	16 Gauge Fuse Link
Alternator	Starter Motor Relay	16 Gauge Fuse Link
Alternator	Electric Choke	20 Gauge Fuse Link
Back-up Lights, Windshield Washer, and Turn Signals	Fuse Panel	15 Amp.
Dome, Underhood Courtesy, Map, Cargo Lights, and Cigar Lighter	Fuse Panel	15 Amp.
Headlights	Headlight Switch	12 Amp. C.B.
Heater	Fuse Panel	30 Amp.
Instrument Panel Lights	Fuse Panel	3 Amp.

Circuit	Location	Protective Device ①
Marker Lights – F-250-350 Camper Special F-350 Dual Rear Wheels F-250 Model 84	Instrument Panel	25 Amp. C.B. 15 Amp. C.B. 20 Amp. C.B.
Marker Lights	Starter Relay	20 Gauge Fuse Link
Speed Control – Full Time – 4x4 – Dual Battery	Fuse Panel	20 Amp.
Stop and Emergency Flasher Lights ②	Fuse Panel	20 Amp.
Tail, Parking, License, Marker Lights and Horn	Headlight Switch	15 Amp. C.B.
Trailer Tow	Starter Relay	16 Gauge Fuse Link
Windshield Wiper	Integral with Wiper Switch	C.B.

① Fuse or Circuit Breaker (C.B.) in Amperes.
② Under NO circumstances use more than an 8.5 ampere load across the ignition switch terminals for the rear light circuit on ANY truck or bus which uses the hydraulic stop light switch.

NOTE: Also See Owner's Manual

CK2522-E

CIRCUIT PROTECTION B-, F-500-750, 7000D

Circuit	Location	Protective Device ①
Auxiliary Feed Circuit	Fuse Panel	SFE 20 or AGC 20
Cigar Lighter	Fuse Panel	SFE 7.5
Courtesy Lights - Model 84 Cigar Lighter, Dome Lights	Fuse Panel	SFE 7.5
Courtesy Lights Cigar Lighter, Dome Lights	Fuse Panel	AGW 15
Electric Fuel Pump F-700-750 Model 84	Cartridge in line	SFE 7.5
F-700-750 Model 81	Fuse Panel	SFE 7.5
Electric Wiper	Integral with Wiper Switch	C.B.
Emergency Flasher (Diesel) F-6000-7000-D	Fuse Panel	SFE 20 or AGC 20
Headlights	Headlight Switch	12 Amp. C.B.
Heater and Defroster, Back-up Lights- Model 81	Fuse Panel	SFE 20 or AGC 20
Heater and Defroster, Back-Up Lights- Model 84, Low Air Buzzer	Fuse Panel	SFE 20 or AGC 20

Circuit	Location	Protective Device ①
Instrument Panel Lights	Fuse Panel	1GA or AGA 2
Marker Lights Model 84	R.H. Cowl Panel	25 Amp C.B.
Model 81	Fuse Panel	20 Amp. C.B.
Radio	Cartridge in line	SFE 7.5
Stop Light — Model 81②	Fuse Panel	AGW 15
Stop Light, Turn Signals and Emergency Flasher — Model 84	Fuse Panel	SFE 20 or AGC 20
Tail Parking, License, Marker Lights and Horn	Fuse Panel	20 Amp. C.B.
Turn Signals and Emergency Flasher - Model 81	Fuse Panel	SFE 20 or AGC 20
Model 81 2 Speed Electric Axle	Fuse Panel	20 Amp. C.B.
Model 84 2 Speed Electric Axle	R.H. Cowl Panel	20 Amp. C.B.

① Fuse or Circuit Breaker (C.B.) in Amperes.
② Under NO circumstances use more than an 8.5 ampere load across the ignition switch terminals for the rear light circuit on ANY truck or bus which uses the hydraulic stoplight switch.

CK2523-D