Ground clearance angles and dimensions

Tires	E78-15	7.00 x 15
Angle of Approach (AA)	40.3°	44.1°
Angle of Departure (AD)	26.6°	29.9°
Ramp Breakover Angle (RBA)	28.6°	32.7°
Ground Clearance (GC) Front Axle	6.8"	8.6"
Rear Axle	6.4"	8.1"
At RBA	11.3"	13.2"
Turning Diameter (Bumper Clearance)	33.9'	33.9'

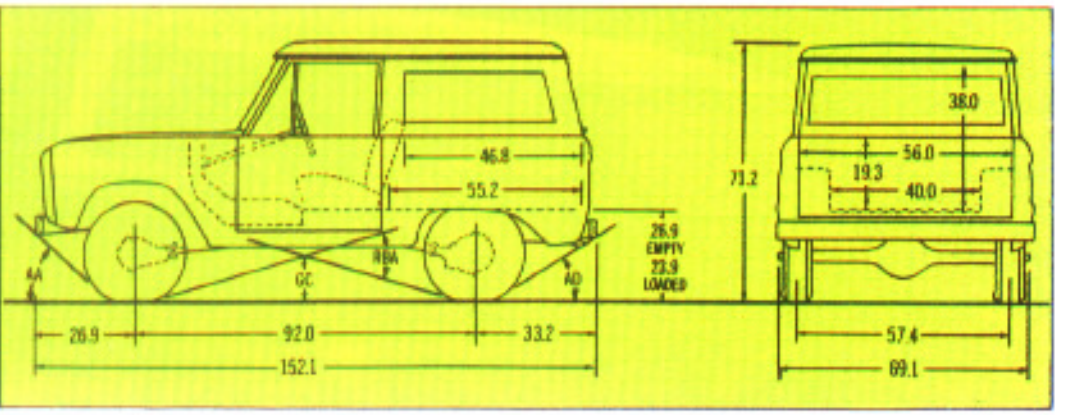

Equipment	Standard	Optional
Alternator:	40 amp.	60 amp.
Axle, Front: Rating (lb.)—Ratio (to 1)	3000—3.54	4.09*
Axle, Rear: Rating (lb.)—Ratio (to 1)	2900—3.50	2900 (w/Traction-Lok) 3.50, 4.11*
Battery: (12 volts)	54 plates, 45 amp-hr.	78 plates, 70 amp-hr
Brakes, Service:	Dual hydraulic, self-adjusting	Power
Front	Single-piston floating caliper disc	—
Rear—size (in.)	11⅝ x 2¼	—
Brakes, Parking: Type	Cable actuation of rear brakes	—
Clutch: Dia. (in.)	11	—
Engine:	302-cu. in. V-8	—
Frame: Section Modulus	2.04	—
Hubs, Front:	Free-running	—
Shock Absorbers: Front and rear	Double-acting 1" piston dia.	HD 1.38" piston dia.
Springs, Front: Coil, Rating @ ground (lb.)	1090	1140, 1190
Springs, Rear: Rating @ ground (lb.)	Progressive 1240	Progressive 1475†
Stabilizer Bar:	—	Front
Steering:	Ross worm & roller w/linkage shock absorber	Integral power
Tank, Fuel: (evaporative control system)	12.2 gal.	7.5 gal. auxiliary with skid plate
Transfer Case: Constant mesh, Dana 20	2-spd. thru-drive	—
Transmission: Fully synchronized, Ford	3-spd. direct*	Automatic*
Tires: (load range)	Tubeless E78-15 B FT	Tube-type 7.00 x 15D TT**
Wheels: No.—type—rim size (in.)	5—5-hole disc—5.5K	—

Bronco color choices: Wimbledon White, Castille Red, Candyapple Red, Midnight Blue Metallic, Bahama Blue, Bali Blue, Hatteras Green Metallic, Glen Green, Dark Jade Metallic, Sequoia Brown Metallic, India Tan, Copper Metallic, Mecca Gold, Cayan Red, Raven Black, Chrome Yellow. Glamour Color paints —Ginger Glow and Medium Green Glow—are optional. Bronco roofs are painted Wimbledon White providing a two-tone paint combination.

*N.A. in Calif. **Consider maximum ground clearance and mobility. Other tire sizes also available. For tire fitment information see your Ford Dealer.
TT=Tube type. FT=Tubeless type. †With 4400-lb. and 4600-lb. (included with 4900-lb. GVW package). *Includes 26 plate, 55 amp-hr battery.
Note: With standard equipment, Bronco has a GVW rating of 4400 lb.

Custom-Tailoring Options: Convenience group (cigarette lighter, inside 8-in. day/nite mirror, map light) • Left-hand chrome remote-control mirror • Right-hand chrome mirror • Rear seat (includes seat belts and armrest) • Chrome bumpers with chrome front guards* • Skid plates for Dana-20 fuel tank and transfer case • Exterior rear-mounted swing-away tire carrier • Bright metal wheel covers* • High flotation tires • Auxiliary 7.5 gal. fuel tank with skid plate • Manual radio • Bright bodyside and tailgate moldings • Bright metal rocker panel molding • Hand-operated throttle (w/manual transmission only) • Extra cooling radiator • Required external sound package • 400 watt single element engine block heater • Northland Special (includes single element 400 watt engine block heater, 50% (—30°) antifreeze, 70 amp-hr battery, 60-amp alternator and limited-slip rear axle) • Locking gas cap • Dual electric horns • Headlining, hardboard*

*Standard on Sport models

Dealer-Installed Accessories: Warn Free-running hubs (automatic) • Snowplow • Snowplow angling kit • Front auxiliary air springs • Trailer hitch • Locking gas cap • Fire extinguisher • AM radio • Cigarette lighter • Trailer towing mirrors • Vanity visor mirror • 2-way reflector flares • Transmission auxiliary oil cooler • 8" chrome mirror (3 x 5") • LH remote mirror (4 x 5") • Coolant recovery system.

◀ **Snowplow Blade** may be adjusted easily to various heights and angles (with kit) from within the cab.

Swing-Away Spare Tire Carrier ▶ puts spare out of the way for more cargo or luggage area, easier access.

Specifications, descriptions and illustrative material contained herein were as accurate as known at the time this publication was approved for printing. Ford Division reserves the right to discontinue models or colors at any time or change specifications, equipment or design without notice and without incurring obligation. Specifications are applicable to units sold in the United States, its territories and possessions and may vary outside these areas. Some of the vehicle colors and paint combinations illustrated are special order options only. All options and accessories illustrated or referred to as optional or available in this publication are at extra cost. Some options are required in combination with other options. For the price of the model with the equipment you desire or verification of specifications contained herein, see your Ford Dealer.

THE CLOSER YOU LOOK, THE BETTER WE LOOK

FORD BRONCO

Motorcraft Ford

For continued top performance, be sure to specify genuine Motorcraft Parts from Authorized Service Dealers wherever replacement is necessary.

FORD DIVISION Ford