Ground clearance angles and dimensions

Tires	E78-15	7.00 x 15
Angle of Approach (AA)	40.2°	44.3°
Angle of Departure (AD)	26.5°	30.1°
Ramp Breakover Angle (RBA)	28.6°	33.0°
Ground Clearance (GC) Front Axle	6.7"	8.4"
Rear Axle	6.4"	8.1"
At RBA	11.3"	13.2"
Turning Diameter (Bumper Clearance)	33.6'	33.6'

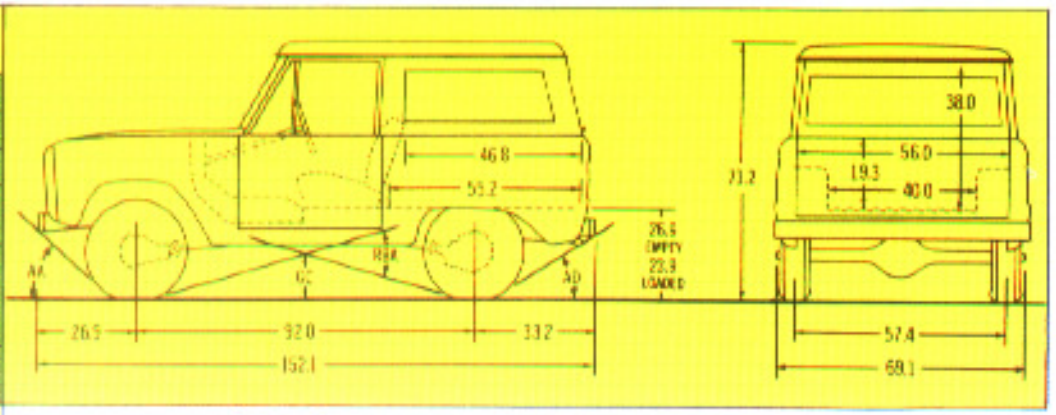

Equipment	Standard	Optional
Alternator:	38 amp.	55 amp.
Axle, Front: Rating (lb.)	3000	Limited-Slip*
Axle, Rear: Rating (lb.)—Ratio (to 1)	2900—3.50	2900—4.11
Ratios for 2900 and 3300* Traction-Lok	—	3.50, 4.11
Battery: (12 volts)	54 plates, 45 amp-hr	78 plates, 70 amp-hr
Brakes, Service: Dual hydraulic system	Self-adjusting	—
Size (in.) front	11 x 2	—
rear	10 x 2½	—
Brakes, Parking: Type	Cable actuation of rear brakes	—
Clutch: Dia. (in.)	11	—
Engine:	302 cu. in. V-8	—
Frame: Section Modulus	2.04	—
Hubs, Front:	Free-running	—
Shock Absorbers: Front and rear	Double-acting	—
Springs, Front: Coil, Rating @ ground (lb.)	1075	1130
Springs, Rear: Rating @ ground (lb.)	Progressive 1240	Progressive 1475†
Steering:	Ross worm & roller w/linkage shock absorber	Power
Tank, Fuel: (evaporative control system)	12.2 gal.	7.5 gal. auxiliary with skid plate
Transfer Case: Constant mesh, Dana 20	2-spd. thru-drive	—
Transmission: Fully synchronized, Ford	3-spd. direct	Automatic
Tires: (load range)	Tubeless E78-15 B †††	Tube-type 7.00 x 15C T1**
Wheels: No.—type—rim size (in.)	5—5-hole disc—5.5K	—

Bronco color choices: Wimbledon White, Viking Red, Candyapple Red, Moonlight Blue Metallic, Bahama Blue, Wind Blue, Hatteras Green Metallic, Baytree Green, Glen Green, Dark Jade Metallic, Sequoia Brown Metallic, Vineyard Gold, Hot Ginger Metallic, Ferrari Orange, Raven Black, Chrome Yellow. Glamour Color paints—Ginger Glow and Medium Green Glow—are optional. Bronco roofs are painted Wimbledon White providing a two-tone paint combination.

*Includes 11" x 2¼" rear brakes. **Provides maximum ground clearance and durability. Other tire lines also available. For high flotation tire lines see your Ford Dealer. †The Front type. ††Passenger type. †††With 4300-lb. and 4500-lb. Inclined with 4000-lb. and 4500-lb. GVW package.
Note: With standard equipment, Bronco has a GVW rating of 4500 lb.

Custom-Tailoring Options: Convenience group (cigarette lighter*, inside 10" x 7" day/nite mirror, map light) • Left-hand chrome remote-control mirror • Rear seat (includes seat belts and armrests) • Chrome bumpers with chrome front guards* • Skid plates for standard fuel tank and transfer case • Exterior rear-mounted swing-away tire carrier • Bright metal wheel covers* • High-flotation tires • Auxiliary 7.5 gal. fuel tank with skid plate • Manual radio • Bright bodyside and tailgate moldings • Bright-metal rocker panel molding • Hand-operated throttle • Extra cooling radiator • Reduced external sound package • 300 watt dual element engine block heater • Northland Special (includes dual element 300 watt engine block heater, 50% (—35°F) antifreeze, 70 amp-hr battery, 55 amp. alternator and limited-slip rear axle).
*Standard on Sport models

Dealer-Installed Accessories: Worm free-running front hubs (manual or automatic) • Snowplows • Snowplow angling kits • Front auxiliary air springs • Trailer hitch • Locking gas cap • Front tow hooks • Fire extinguisher • Tachometer • Air horns.

◀ **Snowplow Blade** may be adjusted easily to various heights and angles (with kit) from within the cab.

Swing-Away Spare Tire Carrier ▶ puts spare out of the way for more cargo or luggage area, easier access.

Specifications, descriptions and illustrative material contained herein were as accurate as known at the time this publication was approved for printing. Ford Division reserves the right to discontinue models or options at any time or change specifications, equipment or design without notice and without incurring obligation. Specifications are applicable to units sold in the United States, its territories and possessions and may vary outside these areas. Some of the vehicle colors and paint combinations illustrated are special order options only. All options and accessories illustrated or referred to as optional or available in this publication are at extra cost. Some options are required in combination with other options. For the price of the model with the equipment you desire or verification of specifications contained herein, see your Ford Dealer.

THE CLOSER YOU LOOK, THE BETTER WE LOOK

FORD BRONCO

FORD DIVISION

FOT-1512 Printed in U.S.A. 7274