## Ground clearance angles and dimensions

| | | |
|---|---|---|
| Tires | E78-15 | 7.00 x 15 |
| Angle of Approach (AA) | 40.2° | 44.9° |
| Angle of Departure (AD) | 26.5° | 30.1° |
| Ramp Breakover Angle (RBA) | 28.6° | 33.0° |
| Ground Clearance (GC) | | |
| Front Axle | 6.7" | 8.4" |
| Rear Axle | 6.4" | 8.1" |
| At RBA | 11.3" | 13.2" |
| Turning Diameter (Bumper Clearance) | 33.6' | 33.6' |

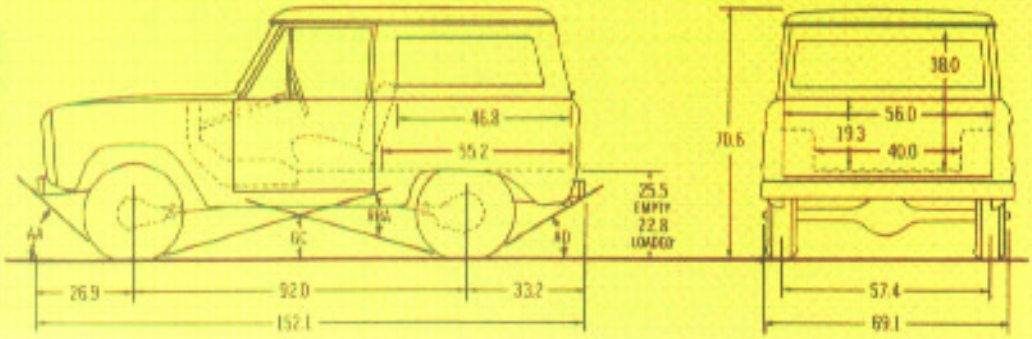


| Equipment | Standard | Optional |
|---|---|---|
| **Alternator:** | 38 amp. | 55 amp. |
| **Axle, Front:** Rating (lb.) | 3000 | Limited-Slip* |
| **Axle, Rear:** Rating (lb.)—Ratio (to 1) | 2780—4.11, 3.50 w/V-8 | 2780—4.57 |
| Ratios for 2780 and 3000* Traction-Lok | — | 3.50, 4.11‡ |
| **Battery:** (12 volts) | 54 plates, 45 amp-hr | 66 plates, 70 amp-hr |
| **Brakes, Service:** Dual hydraulic system | Self-adjusting | — |
| Size (in.) front | 11 x 2 | — |
| rear | 10 x 2½ | — |
| **Brakes, Parking:** Type | Cable actuation of rear brakes | — |
| **Clutch:** Dia. (in.) | 9⅜ w/Six, 11 w/V-8 | — |
| **Engine:** | 200-cu. in. Six‡ | 302-cu. in. V-8 |
| **Frame:** Section Modulus | 2.04 | — |
| **Hubs, Front:** | Free-running | — |
| **Shock Absorbers:** Front and rear | Double-acting | — |
| **Springs, Front:** Coil, Rating @ ground (lb.) | 1025 w/Six, 1075 w/V-8 | 1075 w/Six, 1130 w/V-8 |
| **Springs, Rear:** Rating @ ground (lb.) | Progressive 1240 | Progressive 1475† |
| **Steering:** | Ross worm & roller w/linkage shock absorber | Power w/V-8 |
| **Tank, Fuel:** (evaporative control system) | 12.2 gal. | 7.5 gal. auxiliary with skid plate |
| **Transfer Case:** Constant mesh, Dana 20 | 2-spd. thru-drive | — |
| **Transmission:** Fully synchronized, Ford | 3-spd. direct | Automatic w/V-8‡ |
| **Tires:** (load range) | Tubeless E78-15 3 PT | Tube-type 7.00 x 15C TT** |
| **Wheels:** No.—type—rim size (in.) | 5—5-hole disc—5.5K | — |

**Bronco color choices:** Wimbledon White, Candycopia Red, Wind Blue, Light Grabber Blue, Midnight Blue Metallic, Pastel Lime, Samoa Lime, Limestone Green Metallic, Village Green, Sequoia Brown Metallic, Hot Ginger Metallic, Burnt Orange, Bold Orange, Sandpiper Yellow, Chrome Yellow, Raven Black. Color Glow paints—Ivy Glow and Gold Glow—are optional. Bronco roofs are painted Wimbledon White providing a two-tone paint combination.

*Includes 11" x 2½" rear brakes. ‡Requires Traction-Lok rear axle. **Provides maximum ground clearance and durability. Other tire sizes also available. For high flotation tire sizes see your Ford Dealer.
TT=Truck type. PT=Passenger type. *Built 4300 lb., included with 4450 lb. GVW package. ‡N.A. in Calif.
Note: With standard equipment, Bronco has a GVW rating of 4250 lb.

**Custom-Tailoring Options:** Convenience group (cigarette lighter*, inside 10 in. day/nite mirror, map light, ignition ring*); • Left-hand chrome remote-control mirror • Rear seat (includes seat belts and armrests) • Chrome bumpers with chrome front guards* • Skid plates for standard fuel tank and transfer case • Exterior rear-mounted swing-away tire carrier • Bright metal wheel covers* • High flotation tires • Auxiliary 7.5 gal. fuel tank with skid plate • Manual radio • Bright body side and tailgate mouldings • Bright metal rocker panel mouldings • Hand operated throttle • Extra cooling radiator (V-8 w/manual transmission).

*Standard on Sport models.

**Dealer-Installed Accessories:** Warn free-running front hubs (manual or automatic) • Snowplows • Snowplow angling kits • Front auxiliary coil springs • Trailer hitch • Locking gas cap • Front tow hooks • Fire extinguisher • Tachometer • Air horns.

◀ **Snowplow Blade** may be adjusted easily to various heights and angles (with kit), from within the cab.

**Swing-Away Spare Tire Carrier** ▶ puts spare out of the way for more cargo or luggage area, easier access.

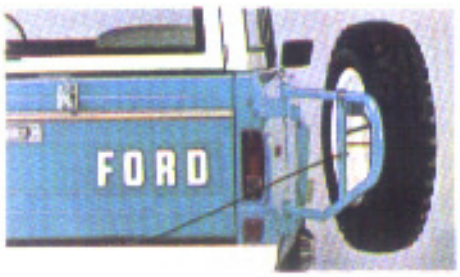


Specifications, descriptions and illustrative material contained herein were as accurate as known at the time this publication was approved for printing. Ford Division reserves the right to discontinue models or options at any time or change specifications, equipment or design without notice and without incurring obligation. Specifications are applicable to units sold in the United States, its territories and possessions and may vary outside these areas. Some of the vehicle colors and paint combinations illustrated are special order options only. All options and accessories illustrated or referred to as optional or available in this publication are at extra cost. Some options are required in combination with other options. For the price of the model with the equipment you desire or verification of specifications contained herein, see your Ford Dealer.

Availability subject to Environmental Protection Agency certification.

# BRONCO

FORD DIVISION Ford

FD-1412 200 (1) U.S.A. 770