Ground clearance angles and dimensions

Tires	E78-15	7.00 x 15
Angle of Approach (AA)	40.2°	44.1°
Angle of Departure (AD)	26.9°	30.1°
Ramp Breakover Angle (RBA)	28.6°	33.0°
Ground Clearance (GC) Front Axle	6.7"	8.4"
Rear Axle	6.4"	8.1"
At RBA	11.3"	13.2"
Turning Diameter (Bumper Clearance)	33.6'	33.6'

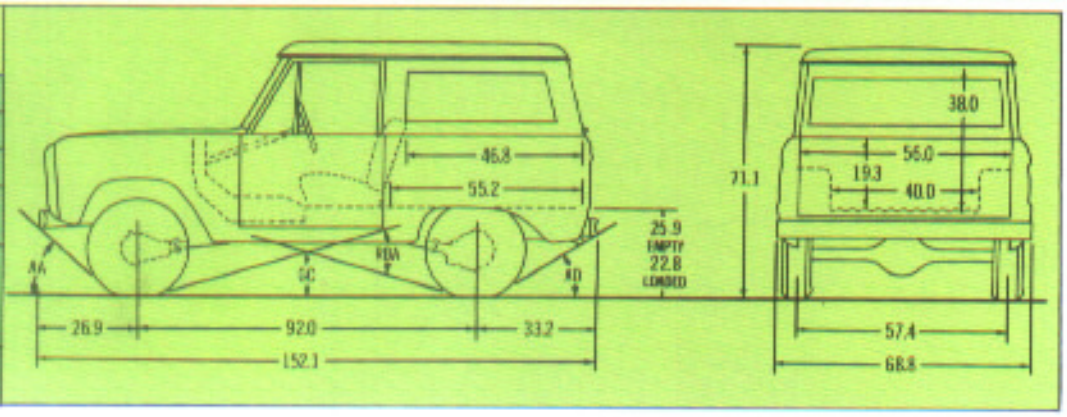

Equipment	Standard	Optional
Alternator:	38 amp.	55 amp.
Axle, Front: Rating (lb.)	3000	Limited-Slip*
Axle, Rear: Rating (lb.)—Ratio (to 1)	2780—4.11, 3.50 w/V-8	2780—4.57
Ratios for 2780 and 3300# Traction-Lok	—	3.50, 4.11
Battery: (12 volts)	54 plates, 45 amp-hr.	66 plates, 70 amp-hr
Brakes, Service: Dual hydraulic system	Self-adjusting	—
Size (in.) front	11 x 2	—
rear	10 x 2½	—
Brakes, Parking: Type	Cable actuation of rear brakes	—
Clutch: Dia. (in.)	9⅝ w/Six, 11 w/V-8	—
Engine:	200-cu. in. Six	302-cu. in. V-8
Frame: Section Modulus	2.04	—
Hubs, Front:	Free-running	—
Shock Absorbers: Front and rear	Double-acting	—
Springs, Front: Coil, Rating @ ground (lb.)	1025 w/Six, 1075 w/V-8	1075 w/Six, 1130 w/V-8
Springs, Rear: Rating @ ground (lb.)	Progressive 1240	Progressive 1475†
Steering:	Gemmer worm & roller w/linkage shock absorber	Power w/V-8
Tank, Fuel: (evaporative control system)	12.2 gal.	7.5 gal. auxiliary with skid plate
Transfer Case: Constant mesh, Dana 20	2-spd. thru-drive	—
Transmission: Fully synchronized, Ford	3-spd. direct	Automatic w/V-8
Tires: (load range)	Tubeless E78-15 3 PT	Tube-type 7.00 x 15 C TT**
Wheels: No.—type—rim size (in.)	5—5-hole disc—5.5K	—

Bronco color choices: Wimbledon White, Candyapple Red, Royal Maroon, Wind Blue, Bahama Blue, Midnight Blue Metallic, Seapine Green Metallic, Bright Lime, Winter Green, Limestone Green Metallic, Mallard Green, Sequoia Brown Metallic, Hot Ginger Metallic, Durango Tan, Tampico Yellow, Chrome Yellow, Raven Black. Bronco roofs are painted Wimbledon White providing a two-tone paint combination.

*Includes 11" x 1½" rear brakes. *Requires Traction-Lok rear axle. **Provides maximum ground clearance and durability. Other tire sizes also available. For high flotation tire sizes see your Ford Dealer. TT—Truck type. PT—Passenger type. †with 4300-lb. GVW only.
Note: With standard equipment, Bronco has a GVW rating of 4300 lb.

Custom-Tailoring Options: Convenience group (cigarette lighter*, inside 10-in. day/nite mirror, horn ring*) • Left-hand chrome remote-control mirror • Rear seat (includes seat belts and armrests) • Chrome bumpers with chrome front guards* • Skid plates for standard fuel tank and transfer case • Exterior rear-mounted swing-away tire carrier • Bright metal wheel covers* • High-flotation tires • Auxiliary 7.5 gal. fuel tank with skid plate • Manual radio • Bright bodyside and tailgate moldings • Bright metal rocker panel molding • Hand-operated throttle (200 Six) • Extra cooling radiator (V-8).

*Standard on Sport models

Dealer-Installed Accessories: Warn free-running front hubs (manual or automatic) • Snowplows • Snowplow angling kits • Front auxiliary air springs • Trailer hitch • Locking gas caps • Front tow hooks • Fire extinguisher • Tachometer.

◀ **Snowplow Blade** may be adjusted easily to various heights and angles (with kit) from within the cab.

Swing-Away Spare Tire Carrier ▶ puts spare out of the way for more cargo or luggage area, easier access.

Specifications, descriptions and illustrative material contained herein were as accurate as known at the time this publication was approved for printing. Ford Division reserves the right to discontinue models or options at any time or change specifications, equipment or design without notice and without incurring obligation. Specifications are applicable to units sold in the United States, its territories and possessions and may vary outside these areas. Some of the vehicle colors and paint combinations illustrated are special order options only. All options and accessories illustrated or referred to as optional or available in this publication are at extra cost. Some options are required in combination with other options. For the price of the model with the equipment you desire or verification of specifications contained herein, see your Ford Dealer.

Availability may be subject to Environmental Protection Agency certification.

FORD BRONCO

FORD DIVISION

FDT-702 Litho in U.S.A. 7/72