Ground clearance angles and dimensions

Tires	E78-15	7.00 x 15
Angle of Approach (AA)	40.2°	44.3°
Angle of Departure (AD)	26.86°	30.1°
Ramp Breakover Angle (RBA)	28.59°	33.01°
Ground Clearance (GC) Front Axle	6.7"	8.4"
Rear Axle	6.4"	8.1"
At RBA	11.3"	13.0"
Turning Diameter (Bumper Clearance)	33.6'	33.6'

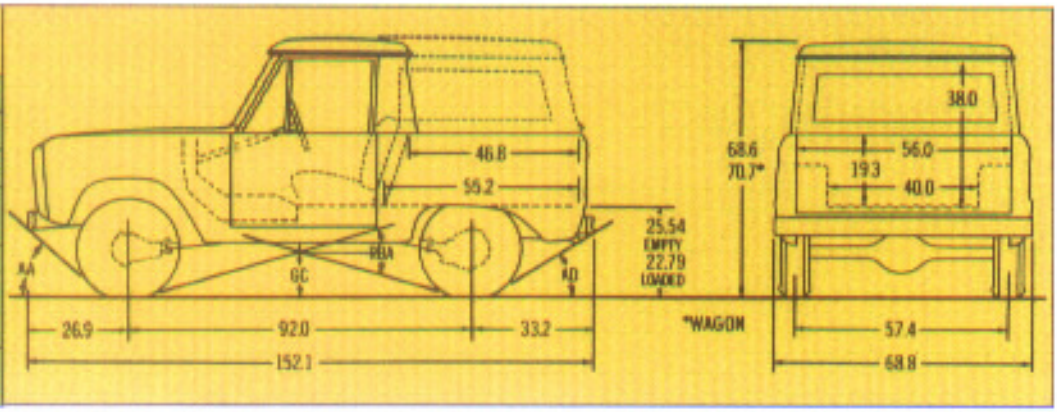

Equipment	Standard	Optional
Alternator:	38 amp.	55 amp.
Axle, Front: Rating (lb.)	3000	Limited-Slip*
Axle, Rear: Rating (lb.)—Ratio (to 1)	2780—4.11, 3.50 w/V-8	2780—3.50, 4.57
Ratios for 2780 and 3300* Traction-Lok	—	3.50, 4.11
Battery: (12 volts)	54 plates, 45 amp-hr.	66 plates, 70 amp-hr
Brakes, Service: Dual hydraulic system	Self-adjusting	—
Size (in.) front	11 x 2	—
rear	10 x 2½	—
Brakes, Parking: Type	Cable actuation of rear brakes	—
Clutch: Dia. (in.)	9⅝ w/Six, 11 w/V-8	—
Engine:	170-cu. in. Six†	302-cu. in. V-8
Frame: Section Modulus	2.04	—
Hubs, Front:	Free-running	—
Shock Absorbers: Front and rear	Double-acting	—
Springs, Front: Coil, Rating @ ground (lb.)	1050 w/Six, 1050 w/V-8	1050 w/Six, 1100 w/V-8
Springs, Rear: Rating @ ground (lb.)	Progressive 1235	Progressive 1475
Steering:	Gemmer worm & roller w/linkage shock absorber	—
Tank, Fuel: (evaporative control system)	12.2 gal.	7.5 gal. auxiliary with skid plate
Transfer Case: Constant mesh, Dana 20	2-spd. thru-drive	—
Transmission: Fully synchronized, Ford	3-spd. direct	—
Tires: (load range)	Tubeless E78-15 4 PR PT	Tube-type 7.00 x 15-C TT**
Wheels: No.—type—rim size (in.)	5—5-hole disc—5.5K	5—5-hole disc—5.5K

Bronco color choices: Wimbledon White, Candyapple Red, Royal Maroon, Wind Blue, Bahama Blue, Bay Roc Blue Metallic, Seapine Green Metallic, Swiss Aqua, Winter Green, Chelsea Green Metallic, Mallard Green, Sequoia Brown Metallic, Hot Ginger Metallic, Prairie Yellow, Calypso Coral, Tampico Yellow, Chrome Yellow. Bronco roofs are painted Wimbledon White providing a two-tone paint combination.

*Includes 77" x 1½" rear brakes. **Provides maximum ground clearance and durability. Other tire sizes also available. For high flotation tire sizes see your Ford Dealer. PT = Passenger type.
TT = Truck type. *Requires Traction-Lok rear axle. †Not available in California.
Note: With standard equipment, Bronco has a GVW range of 4300 lb.

Custom-Tailoring Options: Convenience group (cigarette lighter*, map light, inside 10-in. day/nite mirror, horn ring*); • Left-hand chrome remote-control mirror • Rear seat (wagon) • Hardboard headlining (std. wagon) • Chrome bumpers with chrome front guards* • Skid plate for standard fuel tank and transfer case • Inside tailgate-mounted spare tire carrier (included with wagon) • Exterior rear-mounted swing-away tire carrier • Bright-metal wheel covers (15-in. wheels only)* • High-Flotation tires • Auxiliary 7.5 gal. fuel tank with skid plate • Manual radio • Bright body side and tailgate molding • Bright-metal rocker panel molding • Hand-operated throttle • Extra cooling radiator (V-8).

*Standard on Sport models

Dealer-Installed Accessories: Power take-off (front-mounted) • Warn free-running front hubs (manual or automatic) • Snowplow • Snowplow angling kits • Front auxiliary air springs • Front-mounted winch (electric or mechanical) • Trailer hitch • Locking gas caps • Front tow hooks • Compass • Fire extinguisher • Two-way radio • Transmission oil cooler • Tachometer.

Snowplow Blade may be adjusted easily to various heights and angles (with kit) from within the cab.

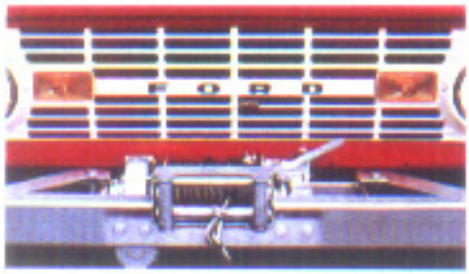

Front-Mounted Winch with 150 feet of 5/16-in. cable is power take-off driven.

Swing-Away Spare Tire Carrier puts spare out of the way for more cargo or luggage area, easier access.

Specifications, descriptions and illustrative material contained herein were as accurate as known at the time this publication was approved for printing. Ford Division reserves the right to discontinue models or options at any time or change specifications, equipment or design without notice and without incurring obligation. Specifications are applicable to units sold in the United States, its territories and possessions and may vary outside these areas. Some of the vehicle colors and paint combinations illustrated are special order options only. All options and accessories illustrated or referred to as optional or available in this publication are at extra cost. Some options are required in combination with other options. For the price of the model with the equipment you desire or verification of specifications contained herein, see your Ford Dealer.

FORD BRONCO

Ford

FOT-612 Litho in U.S.A. 7/71