Ground clearance angles and dimensions

Tires	E78-15	6.50 x 16
Angle of Approach (AA)	40.2°	45.0°
Angle of Departure (AD)	26.88°	31.2°
Ramp Breakover Angle (RBA)	28.59°	34.0°
Ground Clearance (GC)		
Front Axle	7.45"	9.25"
Rear Axle	6.4"	8.22"
At RBA	11.3"	13.3"
Turning Diameter (Bumper Clearance)	33.6'	33.6'

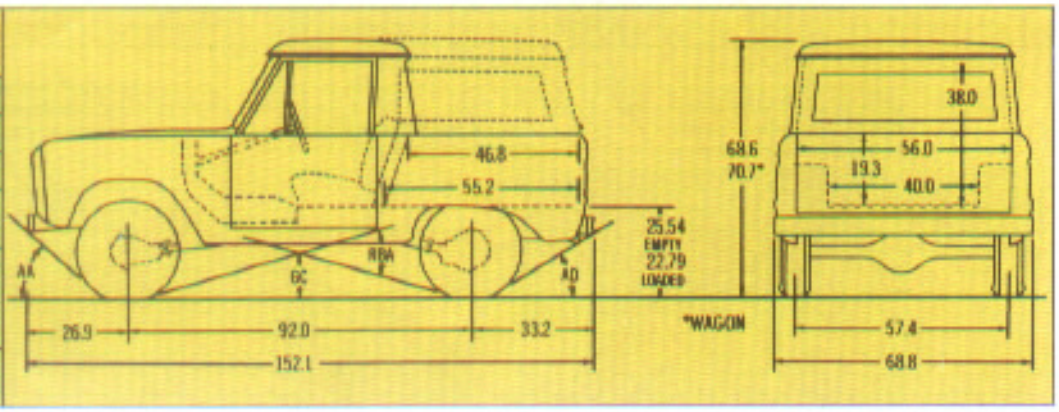

Equipment	Standard	Optional
Alternator:	38 amp.	55 amp.
Axle, Front: Capacity (lb.)—Ratio (to 1)	2500—4.10	Limited-Slip*
Axle, Rear: Capacity (lb.)—Ratio (to 1)	2780—4.11	2780—3.50, 4.57; 3300*—3.50, 4.11
Ratios for 2780 and 3300 Traction-Lok	—	3.50, 4.11
Battery: (12 volts)	54 plates, 45 amp-hr	66 plates, 70 amp-hr
Brakes, Service: Dual hydraulic system	Self-adjusting	—
Size (in.) Front	11 x 2	—
rear	10 x 2½	—
Brakes, Parking: Type	Cable actuation of rear brakes	—
Clutch: Dia. (in.)	9⅜ w/Six, 11 w/V-8	—
Engine:	170-cu. in. Six	302-cu. in. V-8
Frame: Section Modulus	2.04	—
Hubs, Front:	—	Free-running
Shock Absorbers: Front and rear	Double-acting	—
Springs, Front: Coil, Capacity @ pad (lb. ea.)	750 w/Six, 800 w/V-8	850
Springs, Rear: Capacity @ pad (lb. ea.)	Progressive 930	Progressive 1280
Steering:	Gemmer worm & roller w/linkage shock absorber	—
Tank, Fuel: (evaporative control system)	12.7 gal.	10.3 gal. auxiliary with skid plate
Transfer Case: Constant mesh, Dana 20	2-spd. thru-drive	—
Transmission: Fully synchronized, Ford	3-spd. direct	—
Tires: (load range)	Tubeless E78-15 4 PR PT	Tube-type 6.50 x 16 6PR TT**
Wheels: No.—type—rim size (in.)	5—5-hole disc—5½K	5—5-hole disc—5K**

Bronco color choices: Raven Black, Wimbledon White, Candyapple Red, Regis Red, Sky View Blue, Bahama Blue, Diamond Blue, Astra Blue Metallic, Swiss Aqua, Seafoam Green, Boxwood Green, Grabber Green Metallic, Mallard Green, Prairie Yellow, Mojave Tan, Calypso Coral, Chrome Yellow. Bronco roofs are painted Wimbledon White providing a two-tone paint combination.

*Includes 17" x 1½" rear brakes. **Provides maximum ground clearance and durability. Other tire sizes also available. For high flotation tire sizes see your Ford Dealer. PT=Passenger type. TT=Truck type. *Requires free-running hubs and Traction-Lok rear axle.

Note: With standard equipment, Bronco has a GVW rating of 3600 lb. A special 4000-lb. GVW package may be purchased as a unit. This package includes a Ford 3300-lb. capacity rear axle with 11" x 1¾" rear brakes, 1280-lb. rear springs and G78-15 D MR tubeless tires.

Custom-Tailoring Options: Convenience group (cigarette lighter*, map light, inside lights, day/nite mirror, horn ring*) • Deluxe air belt air cleaner (302 V-8 only) • Right-hand chrome rear-view mirror • Left-hand chrome remote-control mirror • Bucket seats • Shoulder harness • Rear seat (wagon w/bucket seat option) • Fordliner headliner (pkt. wagon) • Chrome bumpers* • Skid plate for standard fuel tank and transfer case • Inside tailgate-mounted spare tire carrier (incl. with rear seat option) • Deluxe rear mounted swing-away tire carrier • Bright metal wheel covers (15-in. wheels only)* • High-flotation tires • Auxiliary 10.3-gal. fuel tank with skid plate • Manual radio and antenna • Bright body side and tailgate moldings • Bright metal rocker panel molding • Dana free-running front hubs (manual) • Hand-operated throttle • Extra cooling radiator (V-8).

Dealer-Installed Accessories: Power take-off (front-mounted) • Warn free-running front hubs (manual or automatic) • Snowplows • Snowplow angling kits • Front auxiliary air springs • Front-mounted winch (electric or mechanical) • Trailer hitch • Locking gas caps • Front tow hooks • Compass • Fire extinguisher • Two-way radio.

*Standard on Sport models.

Snowplow Blade may be adjusted easily to various heights and angles (with kit) from within the cab.

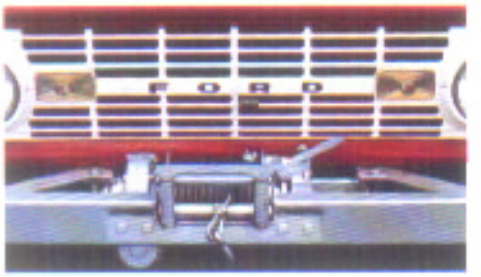

Front-Mounted Winch with 150 feet of 5/16-in. cable is power take-off driven.

Swing-Away Spare Tire Carrier puts spare out of the way for more cargo or luggage area, easier access.

Specifications, descriptions and illustrative material contained herein were as accurate as known at the time this publication was approved for printing. Ford Motor Company reserves the right to discontinue models at any time or change specifications or design without notice and without incurring obligation. Specifications are applicable to units sold in the United States, its territories and possessions and may vary outside these areas. Some of the vehicle colors and paint combinations illustrated are special order options only. All options and accessories illustrated or referred to as optional or available in this publication are at extra cost. For the price of the model with the equipment you desire or verification of specifications contained herein, see your Ford Dealer.

FORD BRONCO

FO3-F12 Litho in U.S.A. 7/70