Ground clearance angles and dimensions

Tires	7.35 x 15	6.50 x 16
Angle of Approach (AA)	43.6°	45.3°
Angle of Departure (AD)	27.2°	31.2°
Ramp Breakover Angle (RBA)	29.[illegible]°	34.0°
Ground Clearance (GC) Front Axle	7.65"	9.25"
Rear Axle	6.6"	8.22"
Sprung	11.5"	13.3"
Turning Diameter (Bumper Clearance)	33.4'	33.4'

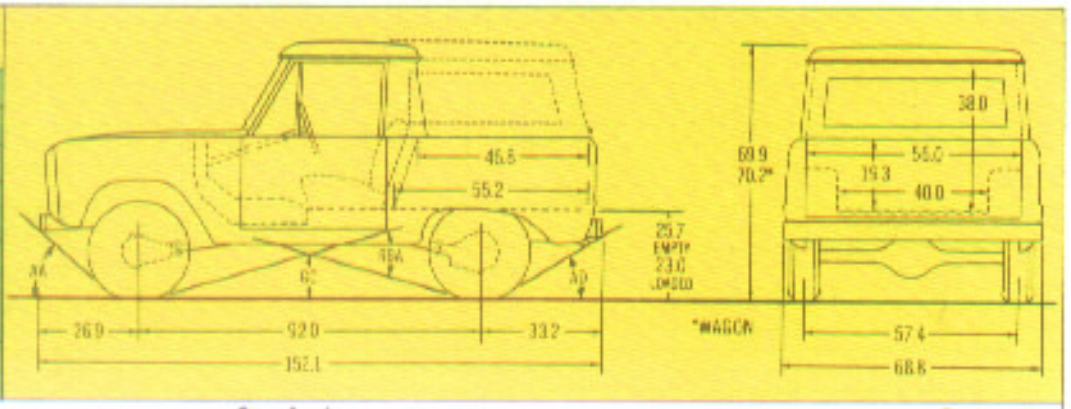

Equipment	Standard	Optional
Alternator:	30 amp.	55 amp.
Axle, Front: Capacity (lb.)—Ratio (to 1)	2500—4.10	Traction-Lok▲
Axle, Rear: Capacity (lb.)—Ratio (to 1)	2780—4.11	2780—3.50, 4.57; 3300*—3.50, 4.11
Ratios for 2780 and 3300 Traction-Lok	—	3.50, 4.11
Battery: (12 volts)	54 plates, 45 amp-hr	66 plates, 70 amp-hr
Brakes, Service: Dual hydraulic system	Self-adjusting	—
Size (in.) Front	11 x 2	—
rear	10 x 2½	—
Brakes, Parking: Type	Cable actuation of rear brakes	—
Clutch: Dia. (in.)	9⅝ w/Six; 11 w/V-8	—
Engine:	170 cu. in. Six	302 cu. in. V-8
Frame: Section Modulus	2.04	—
Hubs, Front:	—	free-running
Shock Absorbers: Front and rear	Double-acting	—
Springs, Front: Coil, Capacity (lb. pad lb. ea.)	750 w/Six; 800 w/V-8	650, 1000
Springs, Rear: Capacity (lb pad lb. ea.)	Progressive 930	Progressive 1280
Steering:	Gemmer worm & roller w/linkage shock absorber	—
Tank, Fuel: (with optional evaporative control system)	14.5 gal. (12.7)	11.5 gal. (10.3); auxiliary with skid plate
Transfer Case: Constant mesh, Dana 20	2-spd. transfer	—
Transmission: Fully synchronized, Ford	3-spd. direct	—
Tires: (load range)	Tubeless 7.35 x 15 6†	Tube-type 6.50 x 16 6PR T**
Wheels: (no.—type—rim size (in.)	5—5-hole disc—5½K	5—5-hole disc—5K**

Bronco color choices: Raven Black, Wimbledon White, Candyapple Red, Royal Maroon, Sky View Blue, Harbor Blue, Diamond Blue, Acapulco Blue, Reef Aqua, Norway Green, Boxwood Green, Mojave Tan, Chrome Yellow, Pinto Yellow, Carmel Bronze Metallic, New Lime, Yucatan Gold. Bronco roofs are painted Wimbledon White providing a two-tone paint combination.

*Metric: 11 x 1¾" rear brake. **Dealer mounted, power steering and humidity. Other tires are available. For high altitude use, see your Ford Dealer. †—Passenger type—4PR; 7—truck type. ▲Requires Automatic Hubs and Trailer light receptacle.
Note: With standard equipment, Bronco has a curb weight of 3[illegible] lb. A special 4[illegible] lb. GVW package may be purchased as a unit. This package includes a Ford 3300 lb. capacity rear axle with 11" x 1¾" rear brake, 1250 lb. rear springs and 6.70 x 15 D 500 nylon tires.

Custom-Tailoring Options: Convenience group (cigarette lighter*, map light, inside "D" day/night mirror, sun visor*) • One-piece rear door (2-door V-8 only) • Right-hand door mirror • Bucket seats • Shoulder harness • Rear foot (Wagon without roof only) • Chrome bumpers* • Skid plate for optional fuel tank under case • Inside hinge-mounted spare tire carrier (incl. with rear step option) • Exterior non-corrosive hardware finishes • Right-hand sliding door (35 inch clear opg.)* • High-flow air cleaner • Auxiliary 11 Vdc fuel tank with skid plate • Remote radio antenna • Right-hand remote control mirror • Right-hand remote control mirror panel mounted • Dome light control (left door, manual) • Heat operated trailer • Heavy duty front hub assemblies (not available on special order).

*Standard on Sport model.

Dealer-Installed Accessories: Power take-off (front mounted) • Warning-flashing vehicle (period equipment) • Snowplow • Snowplow angling kit • Front auxiliary air springs • Front mounted winch • Trailer hitch • Trailer towing harness • Locking gas caps • Rear tow hook • Compass • Fire extinguisher • Tachometer • Two-way radio.

Snowplow Blade may be oriented easily to various heights and angles (with kit). Can be used the full

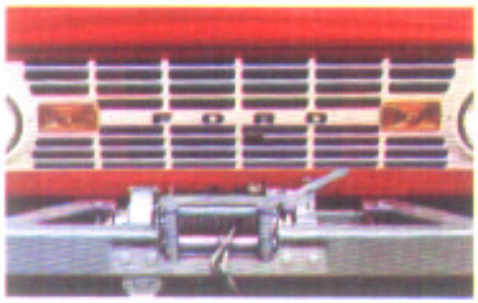

Front-Mounted Winch with 150 feet of 5/16 inch cable is power take-off driven.

Swing-Away Spare Tire Carrier puts the spare tire out of the way for more cargo area, easier access.

Specifications, illustrations and descriptions herein were as accurate as shown at the time this publication was approved for printing. The Ford Division, Ford Motor Company reserves the right to discontinue models at any time or change specifications or design without notice and without incurring obligation. Specifications are applicable to units sold in the United States, its territories and possessions and may vary outside these areas. Some of the vehicle colors and paint combinations illustrated are special order options only. All options and accessories are mentioned or referred to as available in this publication are at extra cost, for the price of the model with the equipment you desire, or verification of specifications contained herein, see your Ford Dealer.

FORD BRONCO

Ford

7DT-302 Litho in U.S.A. 1/71