Ground clearance angles and dimensions

Tires	7.35 x 15	6.50 x 16
Angle of Approach (AA)	40.6°	45.0°
Angle of Departure (AD)	27.2°	31.2°
Ramp Breakover Angle (RBA)	29.1°	34.0°
Ground Clearance (GC)		
Front Axle	7.65"	9.45"
Rear Axle	6.6"	8.4"
Sprung	11.5"	13.3"
Turning Diameter (Bumper Clearance)	33.6'	33.6'

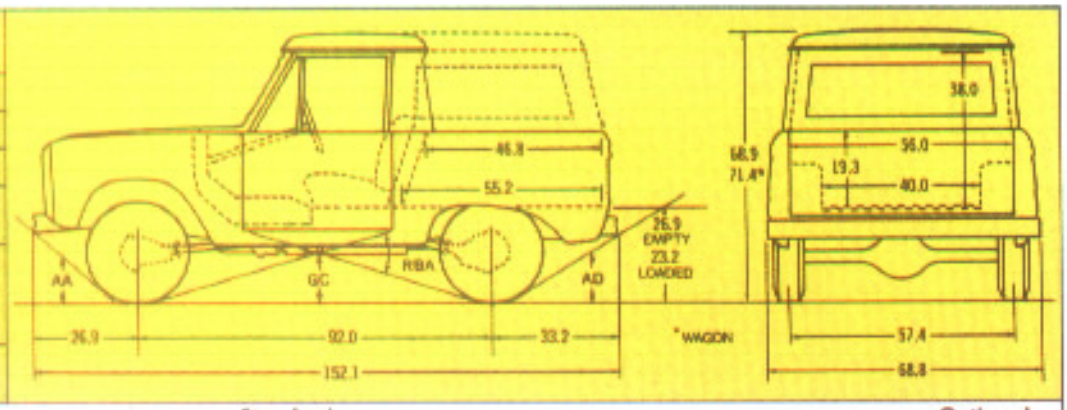

Equipment	Standard	Optional
Alternator:	38 amp.	55 amp.
Axle, Front: Capacity (lb.)—Ratio (to 1)	2500—4.10	Limited-slip[A]
Axle, Rear: Capacity (lb.)—Ratio (to 1)	2780—4.11	2780—3.50, 4.57; 3300*—3.50, 4.11
Ratios for 2780 and 3300 Limited-slip	—	3.50, 4.11
Battery: (12 volts)	54 plates, 45 amp-hr	66 plates, 70 amp-hr
Brakes, Service: Dual hydraulic system	Self-adjusting	—
Size (in.) front	11 x 2	—
rear	10 x 2½	—
Brakes, Parking: Type	Cable actuation of rear brakes	—
Clutch: Dia. (in.)	9⅝ w/Six, 11 w/V-8	—
Engine:	170-cu. in. Six	302-cu. in. V-8
Frame: Section Modulus	2.04	—
Hubs, Front:	—	Free-running
Shock Absorbers: Front and rear	Double-acting	—
Springs, Front: Coil, Capacity (lb. per pair lb. ea.)	750 w/Six, 800 w/V-8	650, 1000
Springs, Rear: Capacity (lb. per pair lb. ea.)	Progressive 930	Progressive 1280
Steering:	Gemmer worm & roller w/linkage shock absorber	—
Tank, Fuel:	14.5 gal.	11.5 gal. auxiliary with skid plate
Transfer Case: Constant mesh, Dana 20	2-spd. thru-drive	—
Transmission: Fully synchronized, Ford	3-spd. direct	—
Wheels: No.—type—rim size (in.)	5—5-hole disc—5½K	5—5-hole disc—5K**
Tires: (load range)	Tubeless 7.35 x 15 B†	Tube-type 6.50 x 16 6PR TT**

Color Choices: Raven Black, Wimbledon White, Candyapple Red, Royal Maroon, Reef Aqua, Sky View Blue, Harbor Blue, Pebble Beige, Lunar Green, Norway Green, Boxwood Green, New Lime, Cordovo Copper, Empire Yellow and Chrome Yellow. Bronco metal roofs are painted Wimbledon White providing a two-tone paint combination.

*Includes 11" x 2½" rear brakes. **Provides maximum ground clearance and durability. Other tire sizes also available. For high location tire sizes see your Ford Dealer. *—Passenger tires—4PR TT—Truck tires. [A]Optional free-running hubs and limited-slip rear axle.
Note: With standard equipment, Bronco has a GVW rating of 3,700 lb. A special 4700-lb. GVW package may be purchased on a set. This package includes a Ford 3300-lb. capacity rear axle with 11" x 1¾" rear brakes, 1280-lb. rear springs and 6.50 x 16 load range D 6PR tubeless tires.

Custom-Tailoring Options: Convenience Group (cigarette lighter,* map light, inside day/nite mirror, horn ring*) • Chrome air cleaner (302 V-8 only) • Right-hand chrome rear view mirror • Bucket seats • Rear seat (Wagon w/bucket seat option) • Chrome bumpers* • Skid plate for std. fuel tank and transfer case • Inside tailgate-mounted tire carrier (std. with rear seat option) • Exterior rear-mounted swing-away tire carrier • Bright metal wheel covers (15 inch wheels only) * • High flotation tires • Auxiliary 11 gal. fuel tank with skid plate • Manual radio and antenna • Bright body side and tailgate moulding • Bright metal rocker panel molding • Refreshers, front • Glass free-running rear hubs (manual) • Ford-operated trailer • Heavy-duty rear axle carrier assembly is available by special order.

*Standard on Sport models

Dealer-Installed Accessories: Chrome inside hand-rails • Power take-off (front-mounted) • Warm free-running front hub (manual or automatic) • Snowplow • Snow-plow angling kit • Front auxiliary air springs • Front-mounted winch • Trailer hitch • Trailer towing mirror • Locking gas caps • Front tow hooks (2)

Snowplow Blade may be adjusted to various heights and angles (with tilt from inside the cab.

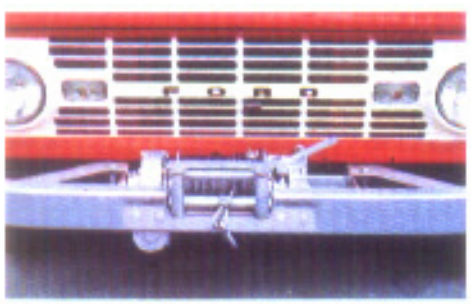

Front-Mounted Winch with 150 feet of 9/16 inch cable is power take-off driven.

Swing-Away Spare Tire Carrier gets the tire out of the way for more cargo area, easier access.

Specifications, descriptions and illustrative material contained herein were as accurate as known at the time this publication was approved for printing. The Ford Division, Ford Motor Company reserves the right to discontinue models at any time or change specifications or design without notice and without incurring obligation. Specifications are applicable to units sold in the United States, its territories and possessions and may vary outside these areas. Some of the vehicle colors and paint combinations illustrated are special order options only. All options and accessories illustrated or referred to as optional or available in this publication are at extra cost. For the price of the model with the equipment you desire or verification of specifications contained herein, see your Ford Dealer.

FORD BRONCO

Ford

Printed in U.S.A. 8-63