Big-brute stamina

Bronco's built to let you go places and do things you could manage before. It has the extra strength to make you king of t mountain. Bronco's rugged all the way through with an all-weld box section frame, forged-steel front radius rods, high-capac axles, front and rear channel bumpers, man-sized brakes. A Bronco's brakes are the dual master cylinder hydraulic type wi a light to warn you of a failure in either half of the system. Anoth important feature is Bronco's positive-lock T-bar shift lever th helps prevent accidental jumping out of 4-wheel drive. T gasoline tank is mounted between the frame rails. Skid plates a available for extra protection of the tank and transfer case a one is included with the optional 11½-gallon auxiliary fuel tan

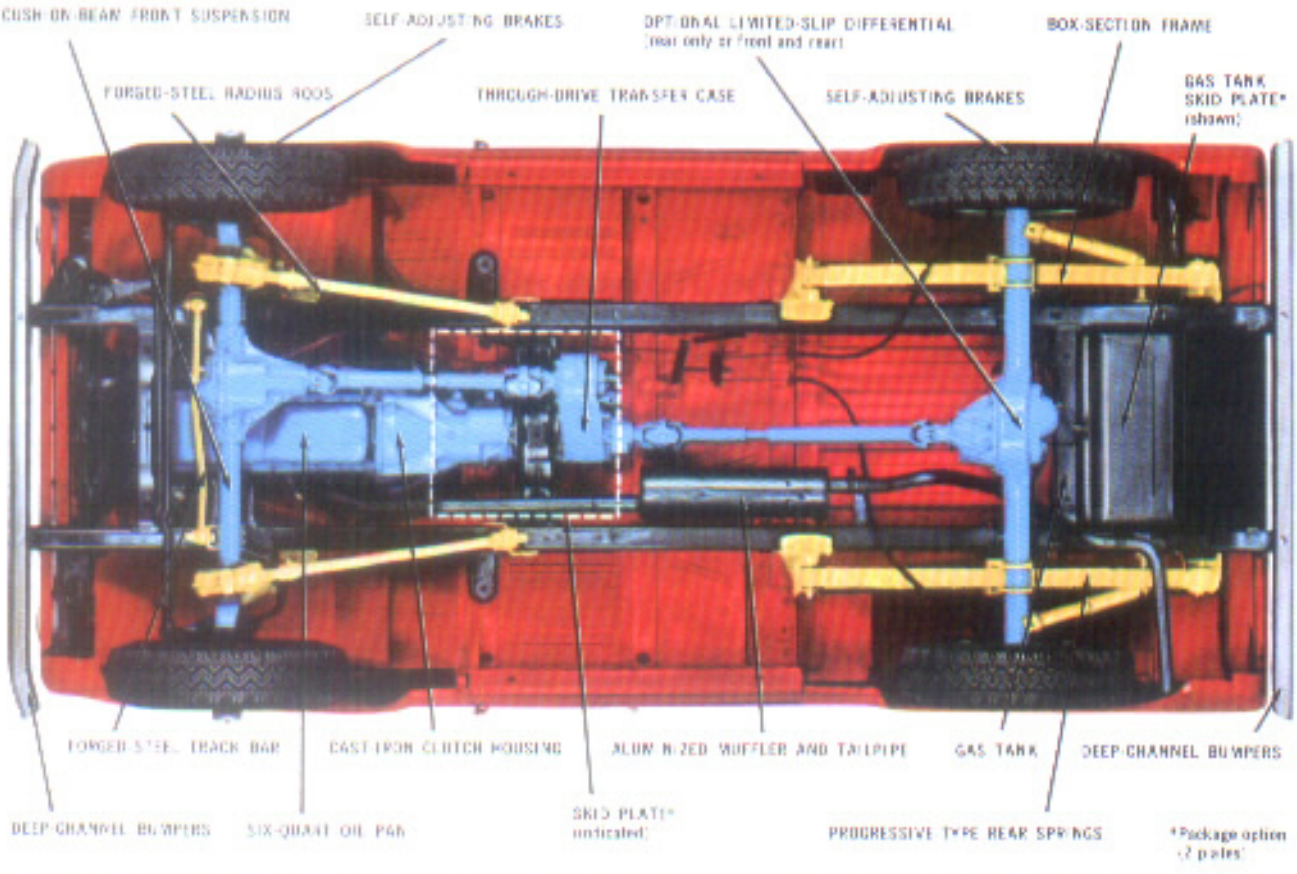

Ground clearance angles and dimensions
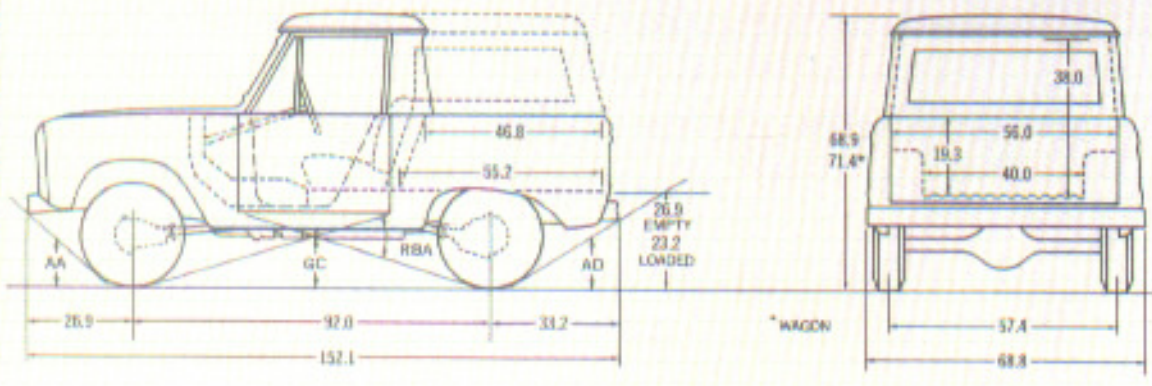
Tires	7.35 x 15	6.50 x 16
Angle of Approach (AA)	40.6°	45.0°
Angle of Departure (AD)	27.2°	31.2°
Ramp Breakover Angle (RBA)	29.1°	34.0°
Ground Clearance (GC) Front Axle	7.65"	9.45"
Rear Axle	6.6"	8.4"
Sprung	11.5"	13.3"
Turning Diameter (Bumper Clearance)	33.6'	33.6'