Unmatched Durability and Long-Life Stamina

A full, box-section welded frame with front and rear box-section crossmembers gives every Bronco a durable, long-life backbone. Rugged channel bumpers are located for first contact with high ground. The gasoline tank is mounted between the frame siderails for greater safety. Skid plates are available for fuel tank and transfer case and are included with the optional auxiliary fuel tank for added protection. Integral steel skid strips stiffen the floor.
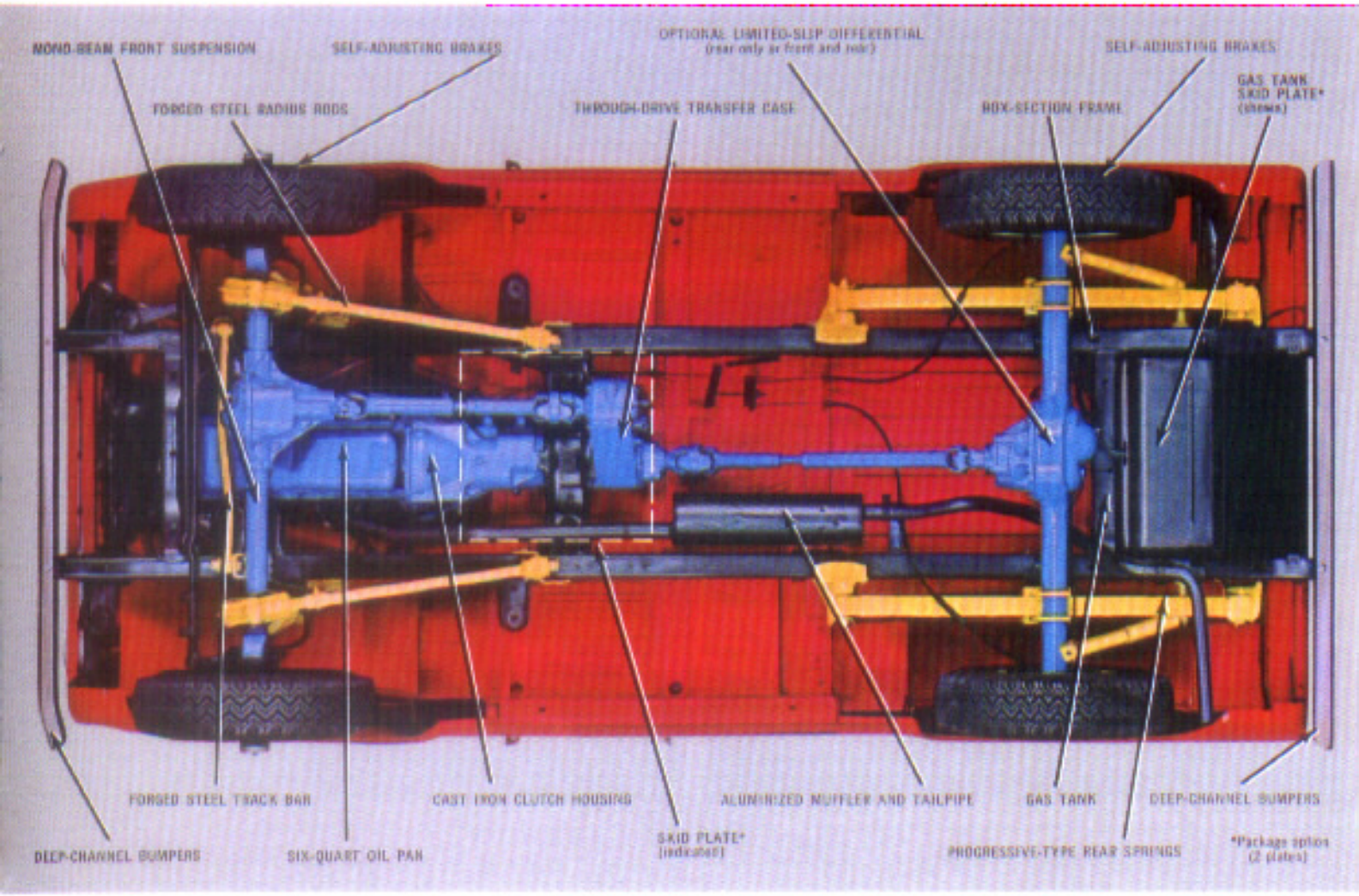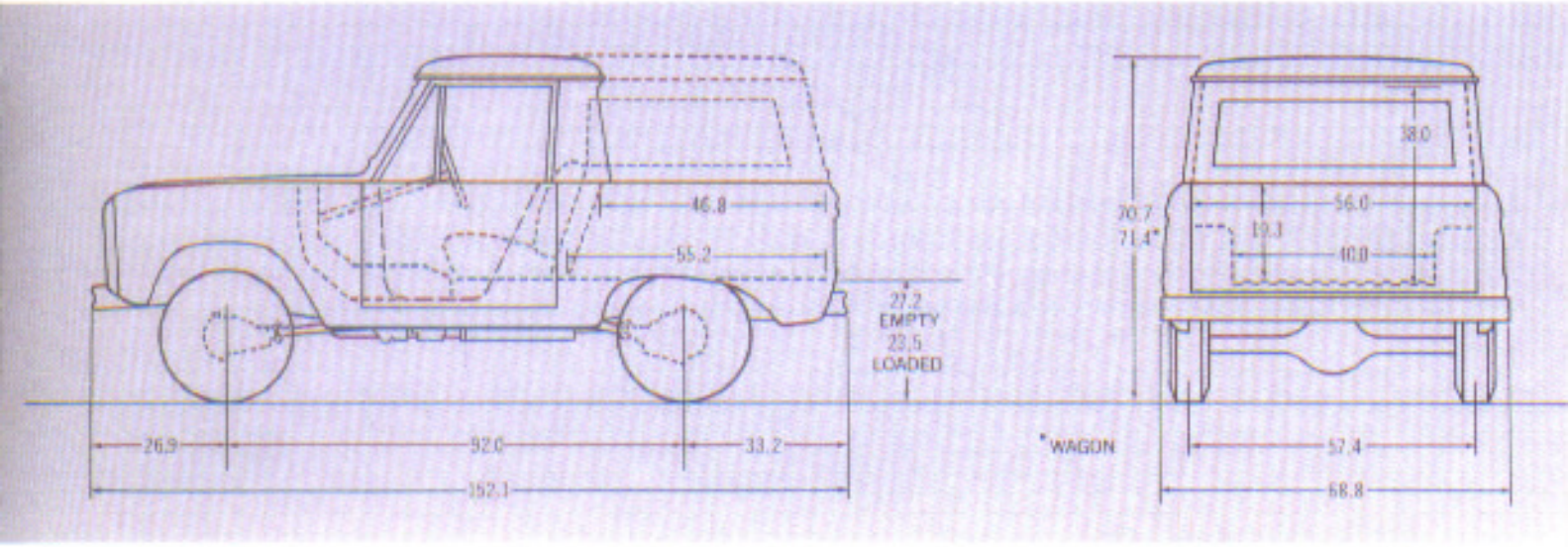
FORD MOTOR COMPANY LIFE-GUARD-DESIGN BRONCO SAFETY FEATURES . . . are standard and include dual hydraulic brake system with warning light, seat belts, padded instrument panel, outside mirror, windshield washers, variable-speed windshield wipers, padded sun visors, thick laminate safety plate glass windshield, turn indicators, backup lights, ICC 4-way emergency flasher, corrosion-resistant brake lines, safety-designed instrument panel and controls and many more.