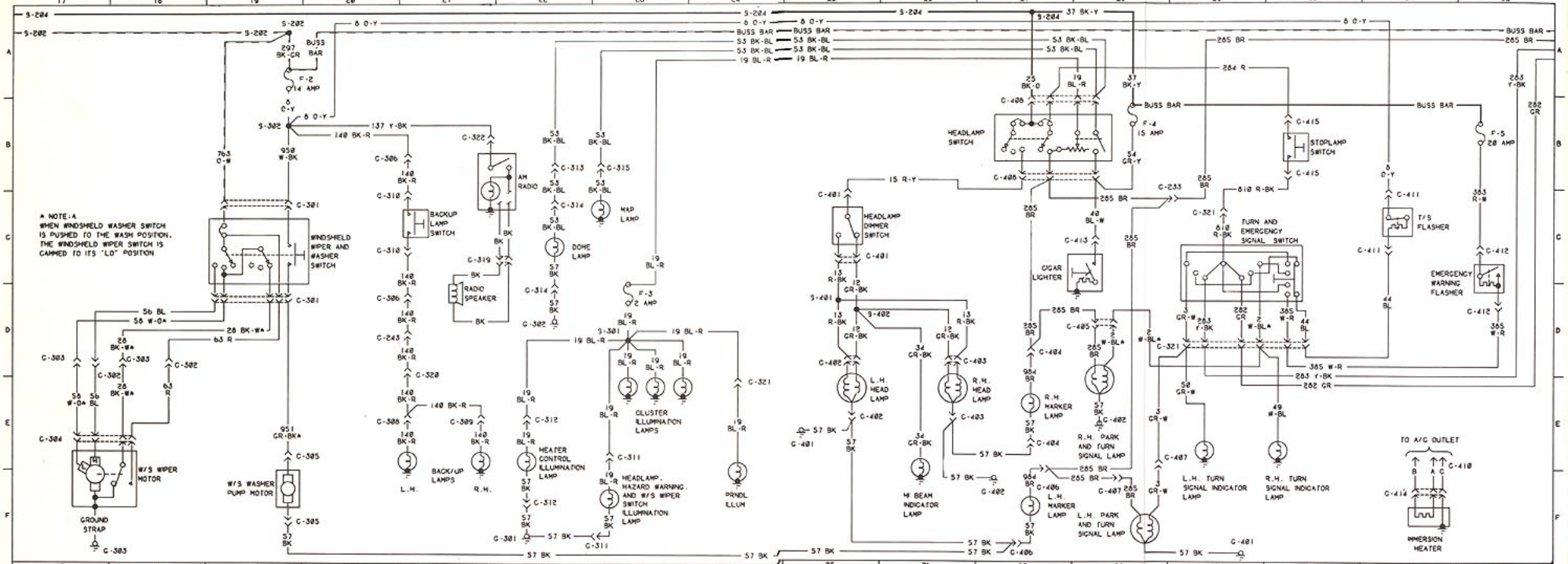
* NOTE:
WHEN WINDSHIELD WASHER SWITCH IS PUSHED TO THE WASH POSITION, THE WINDSHIELD WIPER SWITCH IS CAMMED TO ITS "LO" POSITION
WINDSHIELD WIPER AND WASHER SWITCH
W/S WIPER MOTOR
W/S WASHER PUMP MOTOR
GROUND STRAP
BUSS BAR
F-2 14 AMP
BACKUP LAMP SWITCH
AM RADIO
RADIO SPEAKER
MAP LAMP
DOME LAMP
BACK/UP LAMPS
HEATER CONTROL ILLUMINATION LAMP
CLUSTER ILLUMINATION LAMPS
HEADLAMP, HAZARD WARNING, AND W/S WIPER SWITCH ILLUMINATION LAMP
F-3 2 AMP
PRNDL ILLUM
HEADLAMP SWITCH
F-4 15 AMP
HEADLAMP DIMMER SWITCH
L.H. HEAD LAMP
R.H. HEAD LAMP
HI BEAM INDICATOR LAMP
CIGAR LIGHTER
R.H. MARKER LAMP
R.H. PARK AND TURN SIGNAL LAMP
L.H. MARKER LAMP
L.H. PARK AND TURN SIGNAL LAMP
STOPLAMP SWITCH
TURN AND EMERGENCY SIGNAL SWITCH
T/S FLASHER
EMERGENCY WARNING FLASHER
F-5 20 AMP
L.H. TURN SIGNAL INDICATOR LAMP
R.H. TURN SIGNAL INDICATOR LAMP
TO A/C OUTLET
IMMERSION HEATER