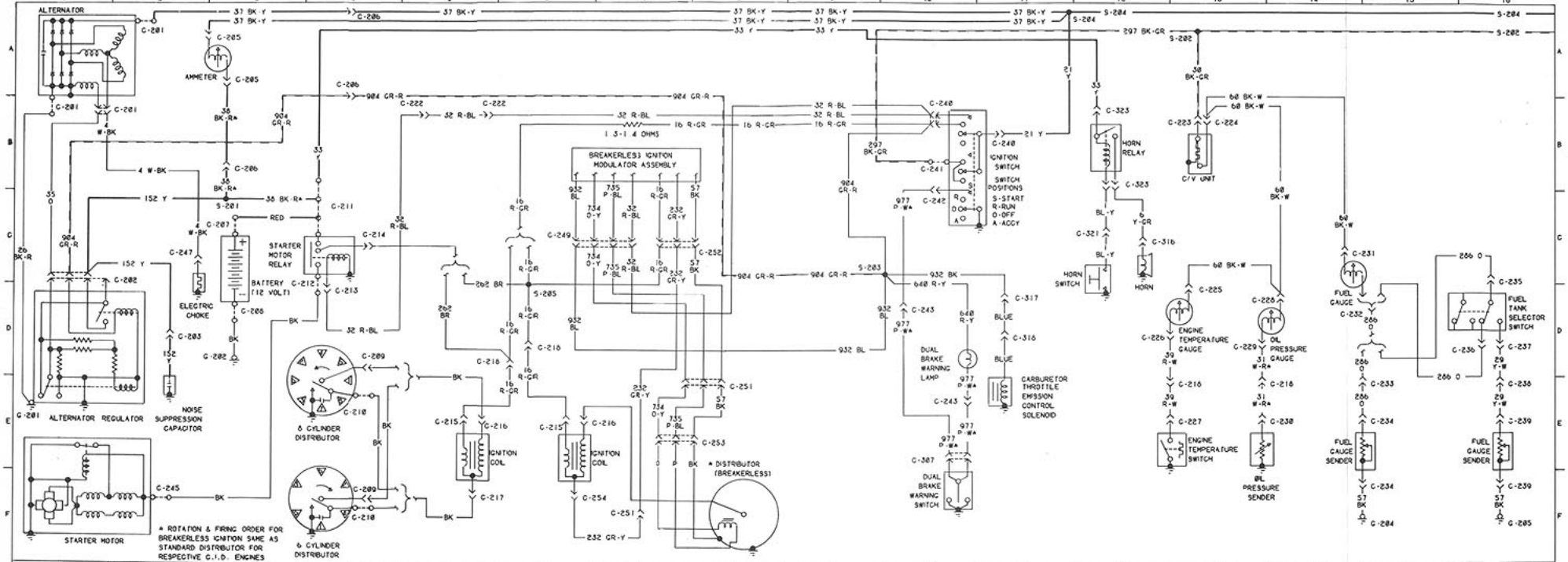
ALTERNATOR
AMMETER
BATTERY (12 VOLT)
STARTER MOTOR RELAY
ELECTRIC CHOKE
ALTERNATOR REGULATOR
NOISE SUPPRESSION CAPACITOR
STARTER MOTOR
6 CYLINDER DISTRIBUTOR
6 CYLINDER DISTRIBUTOR
BREAKERLESS IGNITION MODULATOR ASSEMBLY
1.3-1.4 OHMS
IGNITION COIL
IGNITION COIL
* DISTRIBUTOR (BREAKERLESS)
IGNITION SWITCH
SWITCH POSITIONS
S-START
R-RUN
O-OFF
A-ACCY
DUAL BRAKE WARNING LAMP
DUAL BRAKE WARNING SWITCH
CARBURETOR THROTTLE EMISSION CONTROL SOLENOID
HORN RELAY
HORN SWITCH
HORN
C/V UNIT
ENGINE TEMPERATURE GAUGE
ENGINE TEMPERATURE SENSOR
OIL PRESSURE GAUGE
OIL PRESSURE SENDER
FUEL GAUGE
FUEL GAUGE SENDER
FUEL TANK SELECTOR SWITCH
FUEL GAUGE SENDER
* ROTATION & FIRING ORDER FOR BREAKERLESS IGNITION SAME AS STANDARD DISTRIBUTOR FOR RESPECTIVE C.I.D. ENGINES