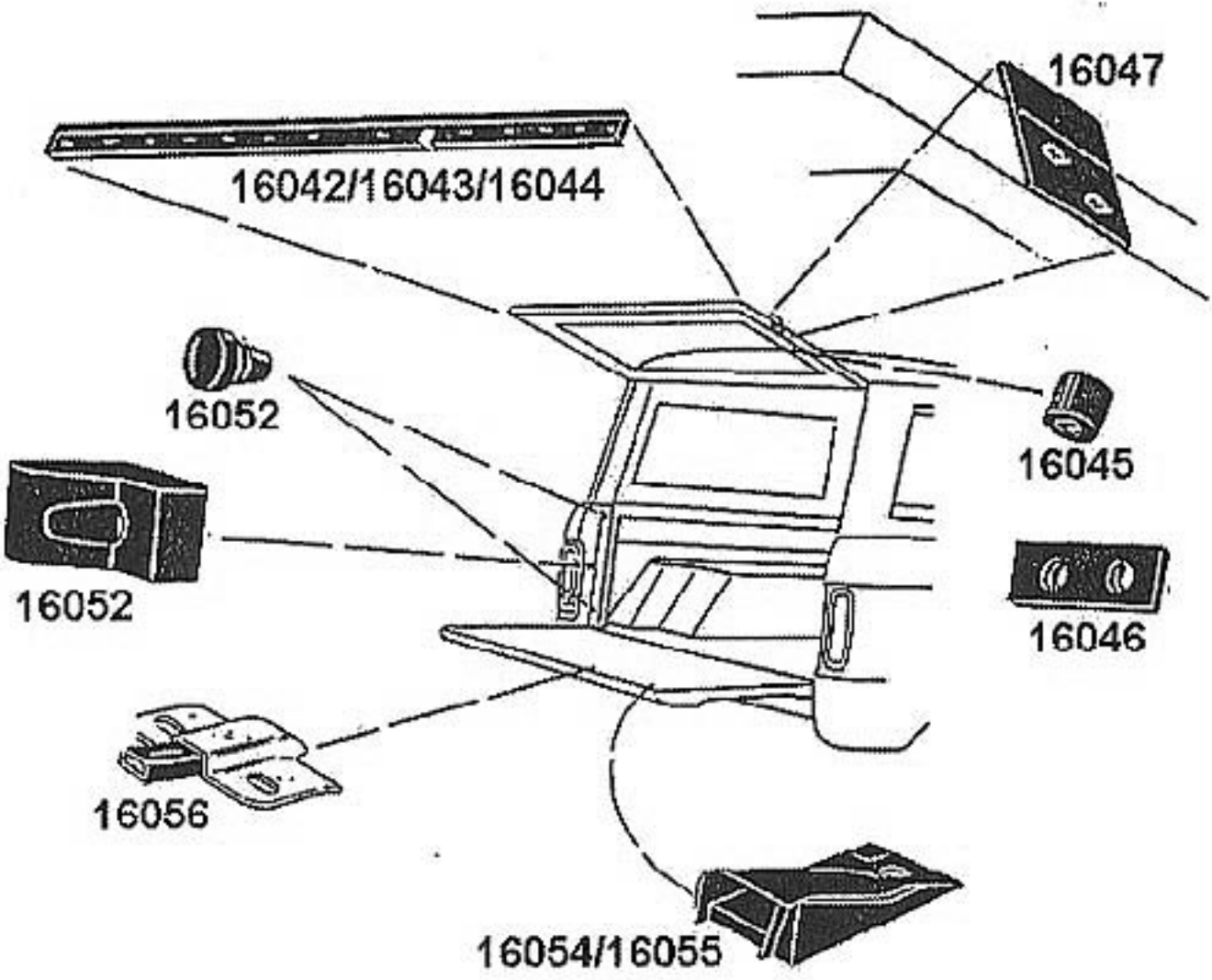
16047
16042/16043/16044
16052
16045
16052
16046
16056
16054/16055