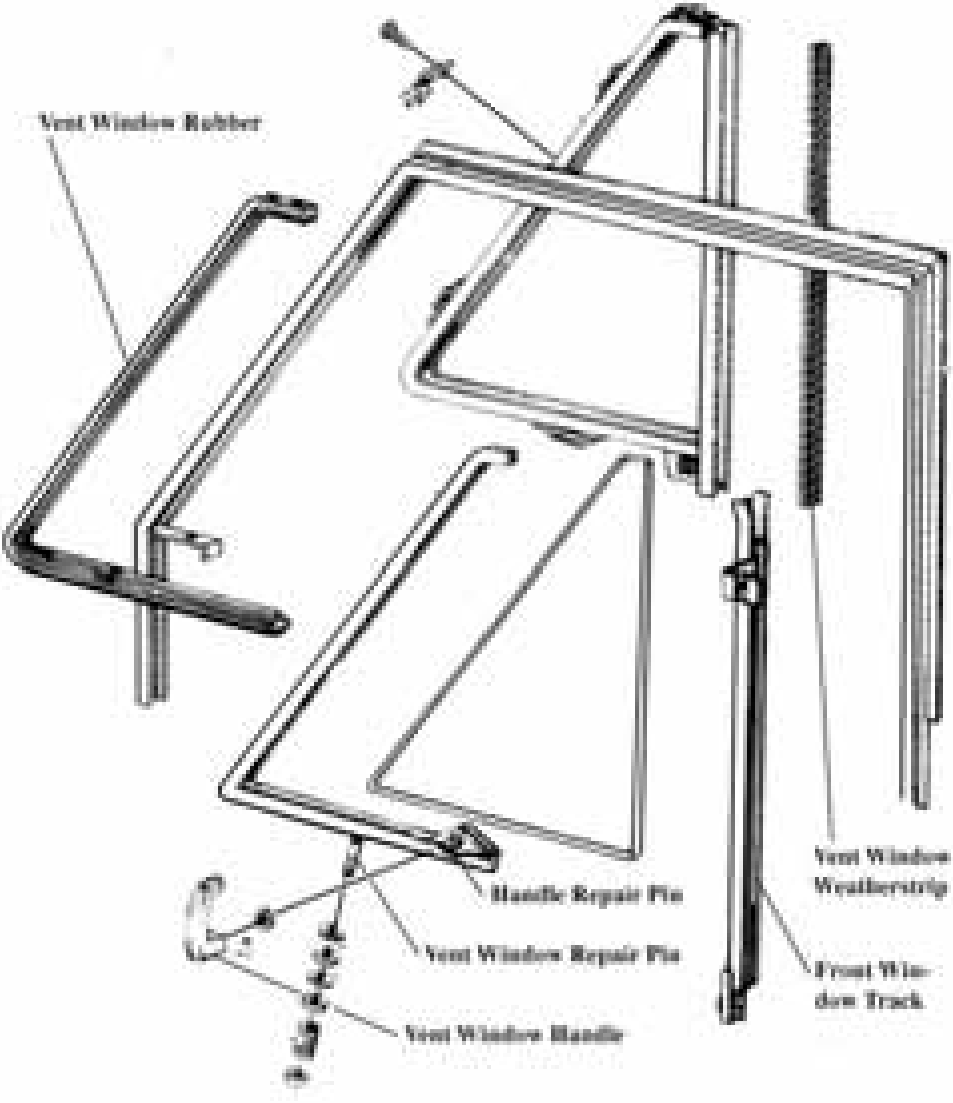
Vent Window Rubber
Handle Repair Pin
Vent Window Repair Pin
Vent Window Handle
Vent Window Weatherstrip
Front Window Track