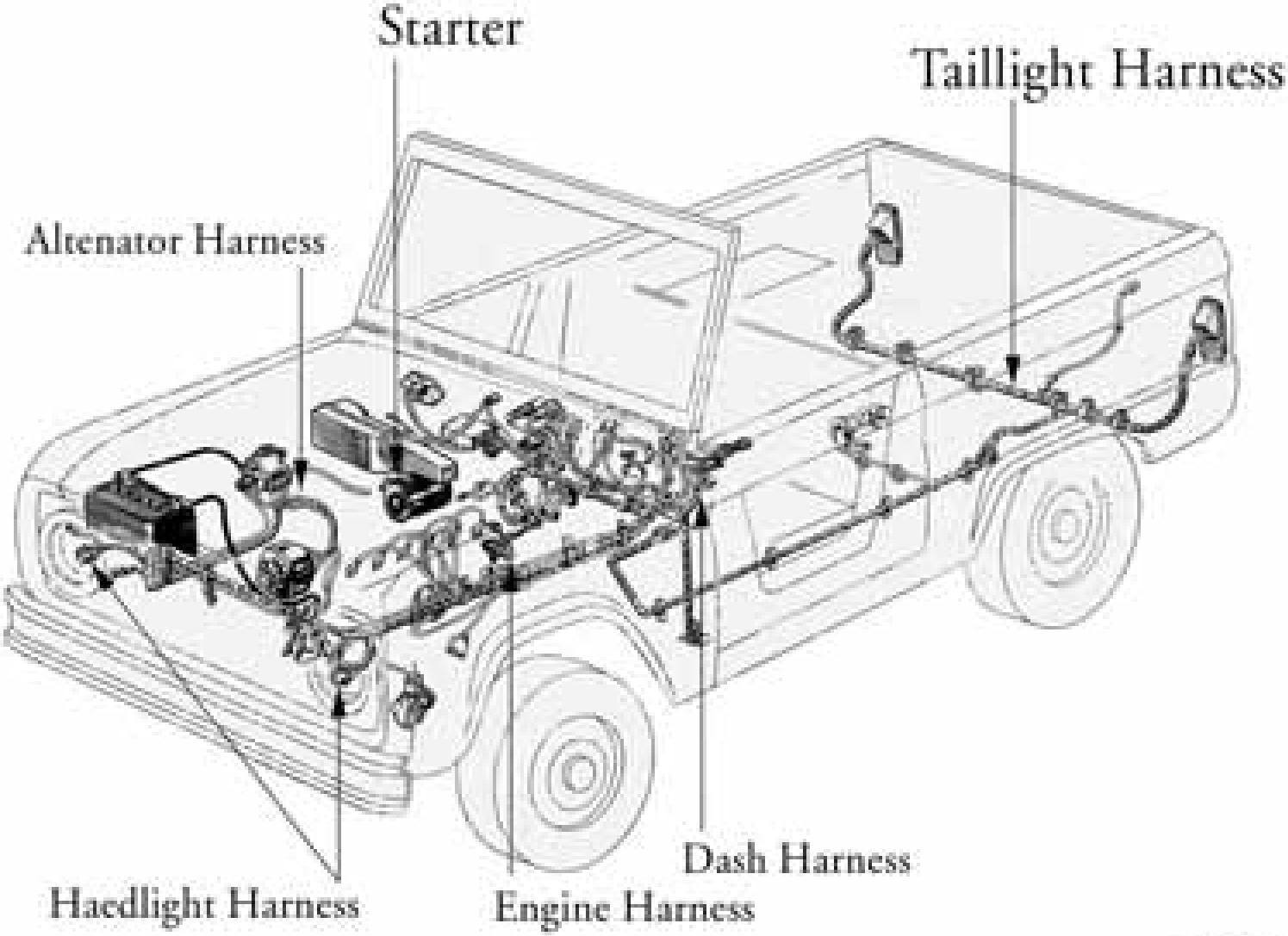
Starter
Taillight Harness
Altenator Harness
Dash Harness
Haedlight Harness
Engine Harness
FoMoCo