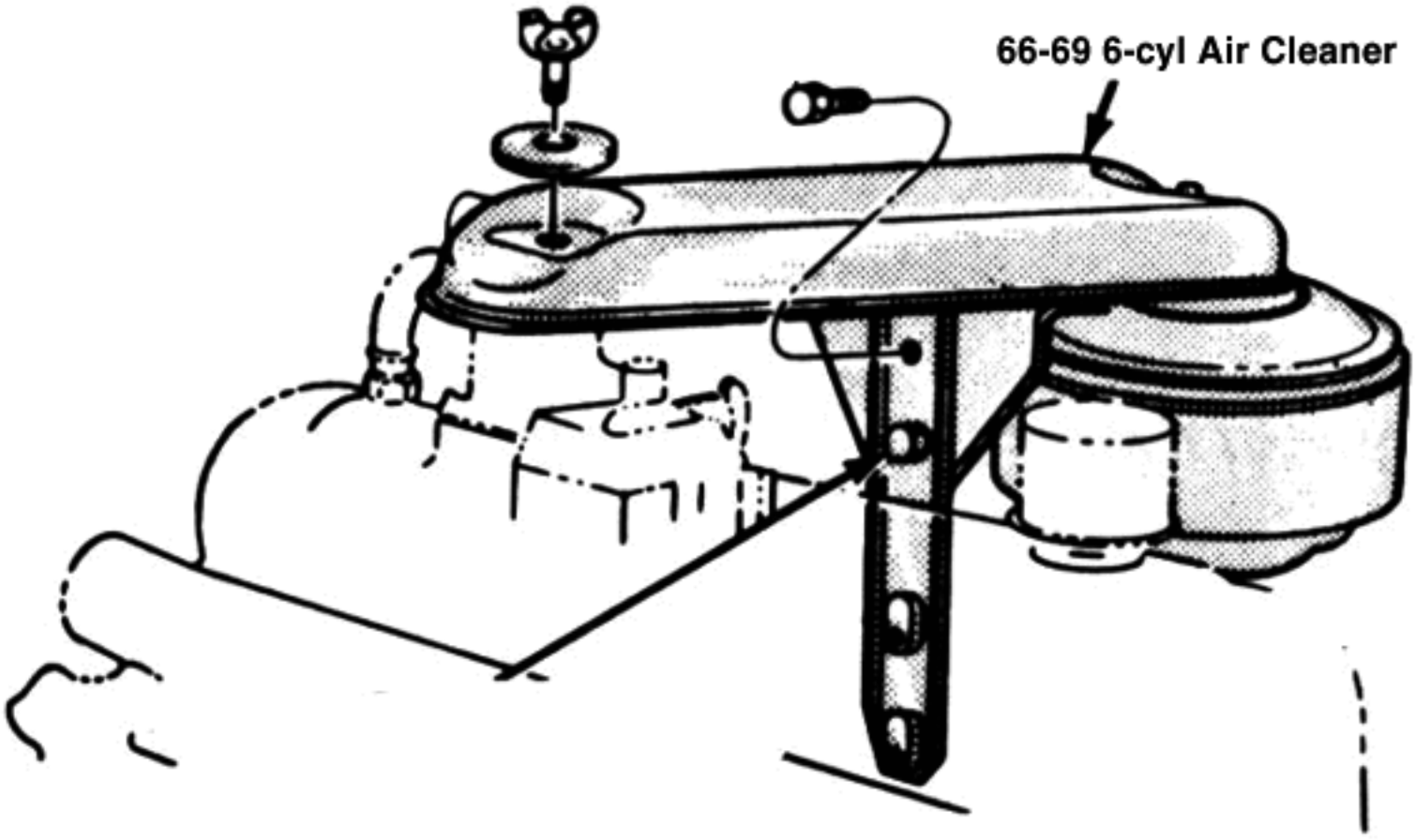
66-69 6-cyl Air Cleaner