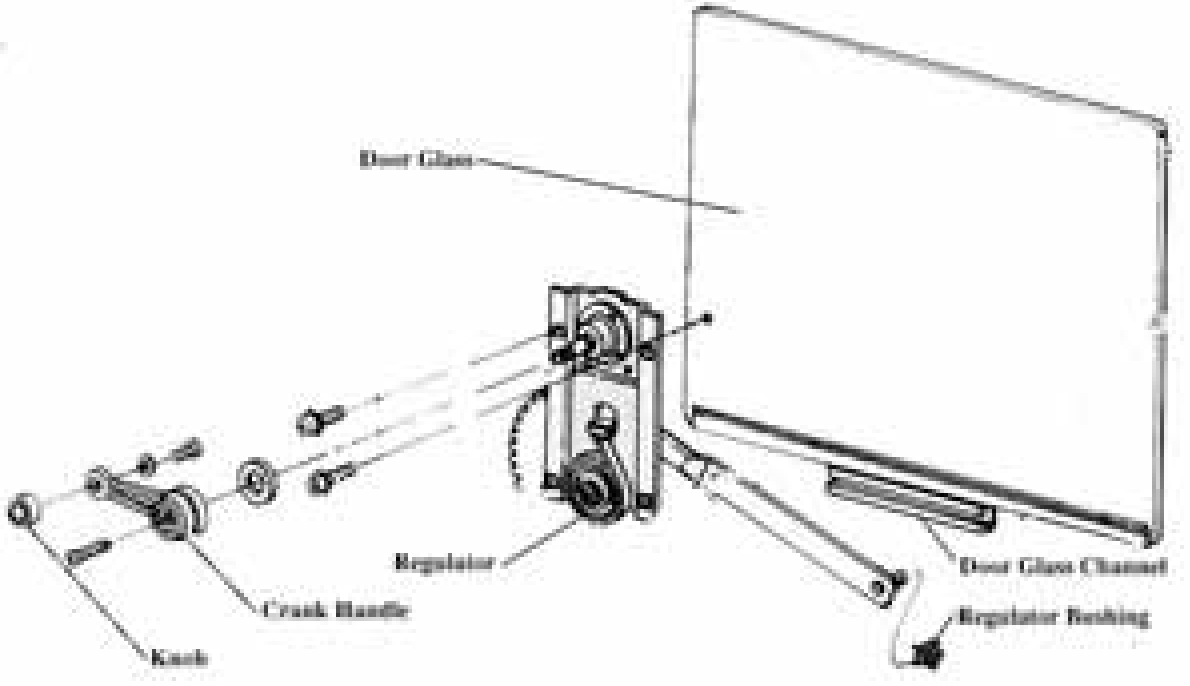
Door Glass
Regulator
Door Glass Channel
Crank Handle
Regulator Bushing
Knob