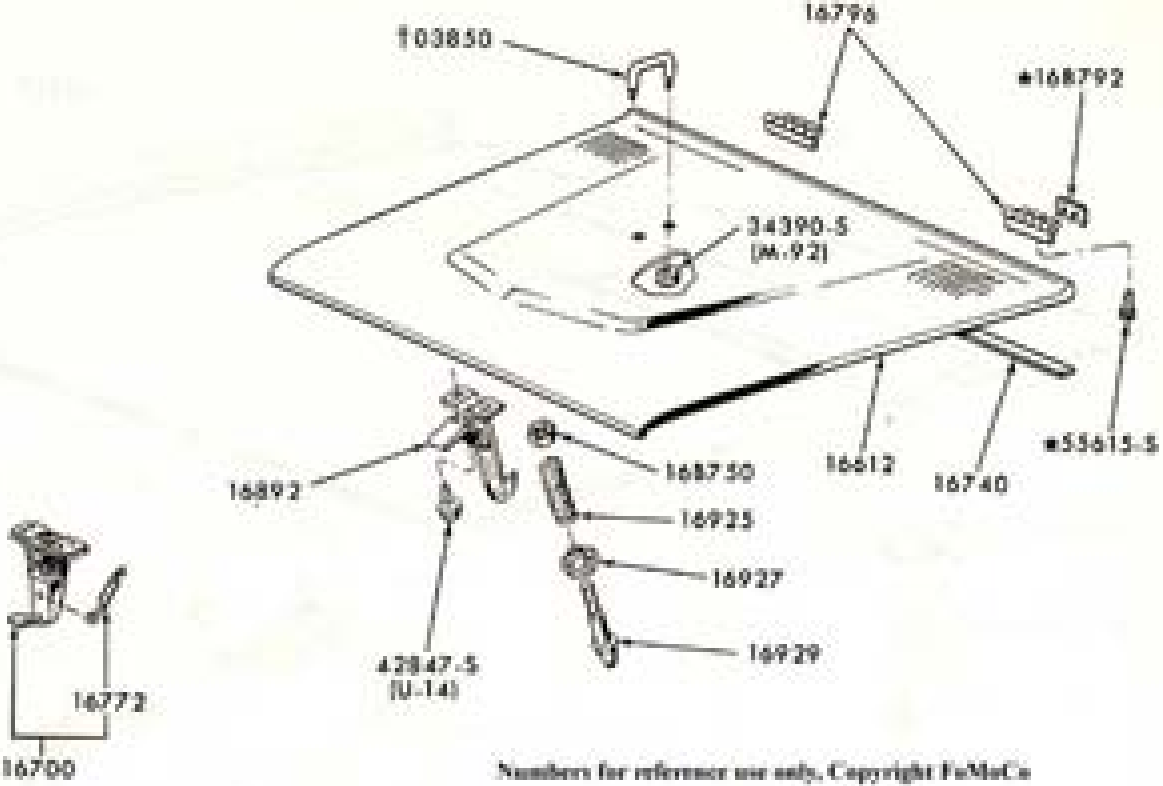

Numbers for reference use only. Copyright FaMaCo