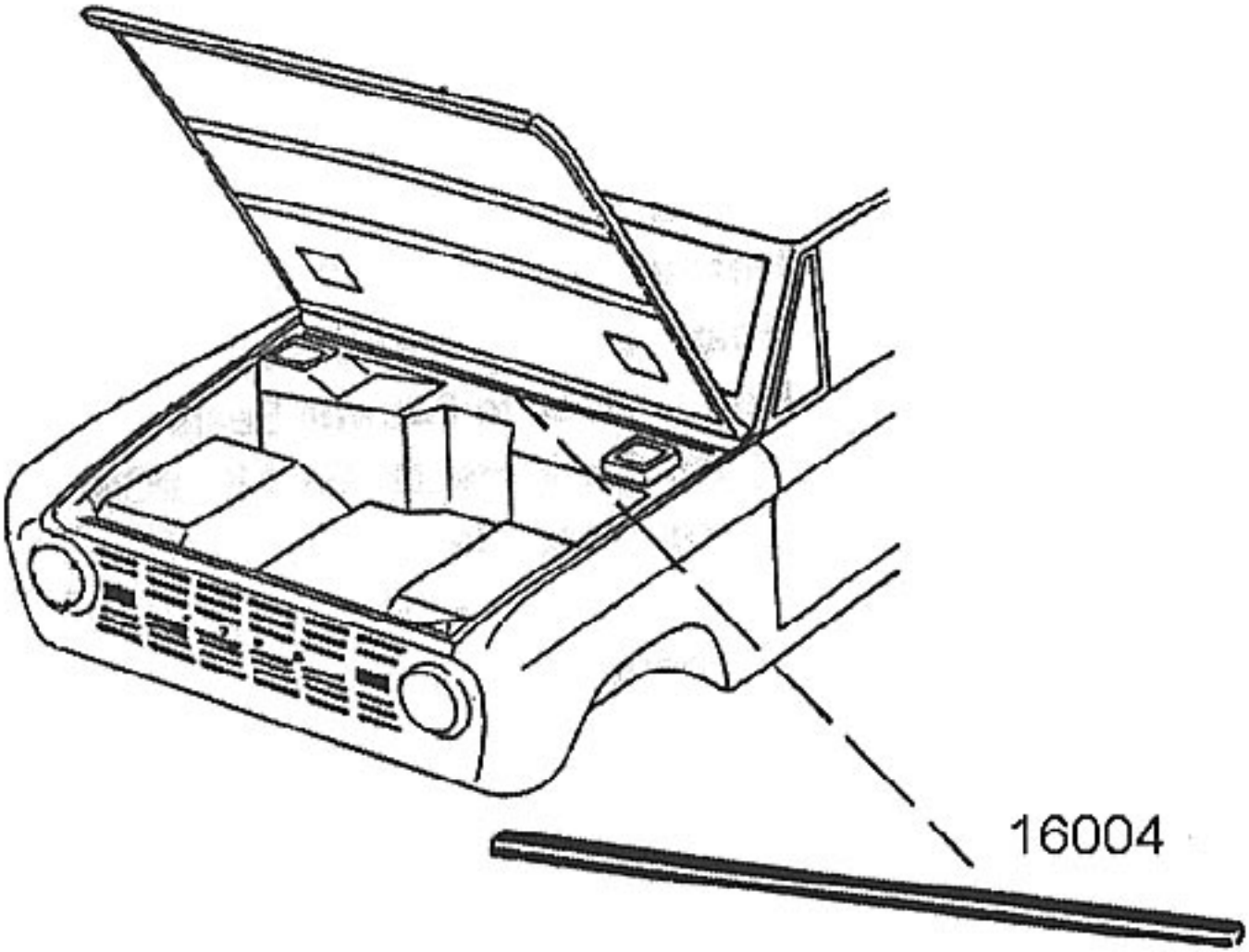
16004