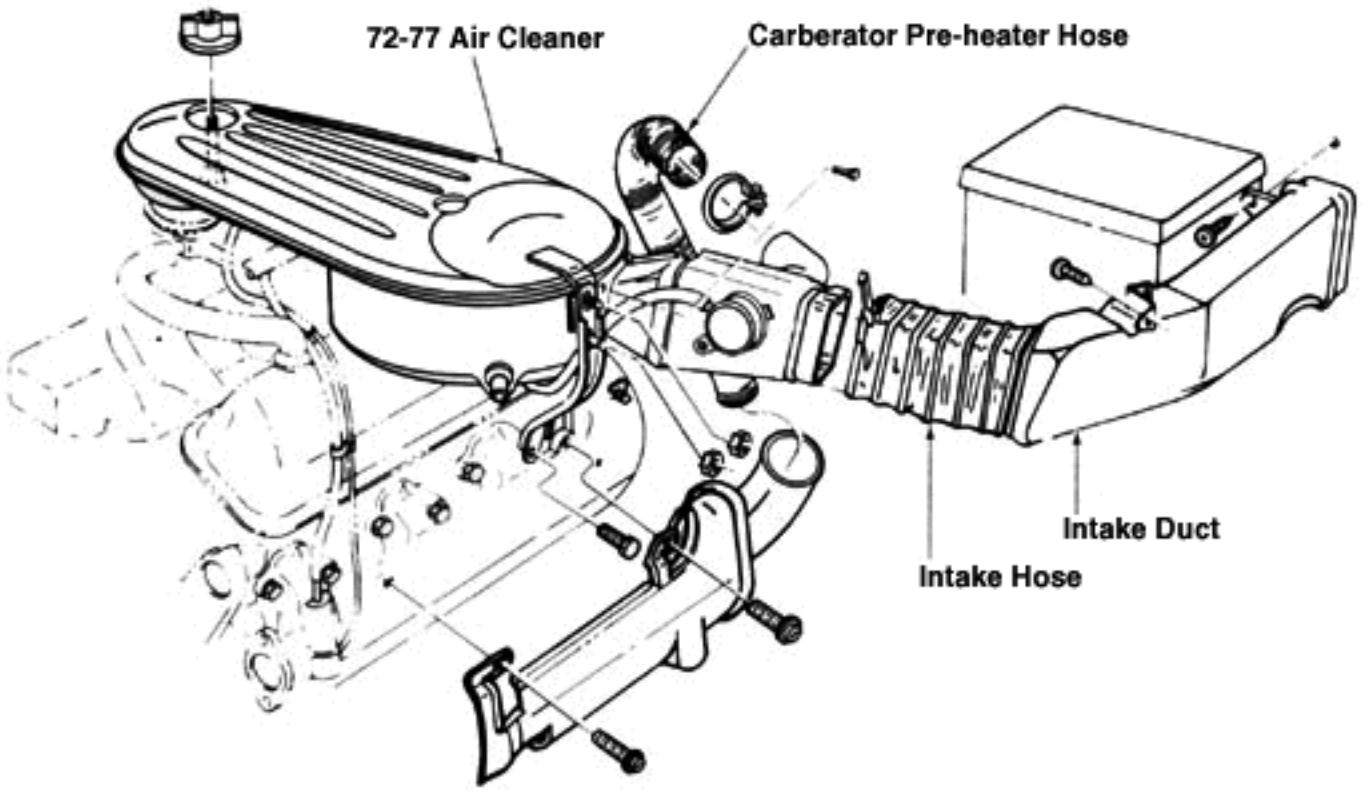
72-77 Air Cleaner
Carberator Pre-heater Hose
Intake Duct
Intake Hose