Steering Column — Shift Rod Within Tube

PART 13-06

APPLIES TO F-100 — F-350, E-100 — E-350 AND BRONCO ONLY

SUBJECT	PAGE
ADJUSTMENTS	
Steering Column Alignment	
E-100 — E-350	13-06-2
F-100 — F-350, and Bronco	13-06-2
DESCRIPTION	13-06-1
DIAGNOSIS AND TESTING	13-06-1
DISASSEMBLY AND ASSEMBLY	
Manual 3-Speed Shift Tube Assembly	13-06-21
Non-Tilting Steering Column Flange and Locking Mechanism Subassembly	13-06-19
Steering Column Lower Bearing Retainer Subassembly	13-06-21
Steering Column Non-Tilting Steering Column F-100 — F-350 and Bronco	13-06-13
DISASSEMBLY AND ASSEMBLY (Cont'd.)	
E-100 — E-350	13-06-14
Tilt Column	13-06-16
Steering Shaft and Anti-Rattle Clips	13-06-21
Tilt Mechanism Upper Shaft, Bearings, and Flange Castings	13-06-19
REMOVAL AND INSTALLATION	
Steering Column	
E-100 — E-350	13-06-5
F-100 — F-350	13-06-4
F-100 and F-350 (4x4), and Bronco	13-06-4
Steering Wheel	
E-100 — E-350, F-100 — F-350 and Bronco	13-06-3
SPECIFICATIONS	13-06-21

DESCRIPTION

STEERING COLUMN AND COUPLING SHAFT

F-100—F-350 AND BRONCO

The F-100—F-350 and Bronco vehicles are equipped with a slip-joint coupling shaft which attaches between the steering gear and the steering column lower shaft. The column itself features a concentric outer tube interial shift tube, and steering shaft. The components are designed to collapse in the event of an accident.

Once the column is collapsed, a new column and support bracket must be installed.

E-100—E-350

The E-100—E-350 vehicles are equipped with a steering column which attaches the steering shaft directly to the steering gear. The column design features a concentric outer tube, internal shift tube, and steeri shaft.

E-100—E-350, F-100—F-350, AND BRONCO

Five steering column versions are offered. There a three fixed wheel (non-tilting) columns, manual 3 spe column shift, manual 4-speed floor shift, and automa column shift. There are two tilt columns; manual 4-spe floor shift and automatic column shift. The tilt colum feature five driving positions (two up, two down, a a center position). Both fixed and tilt columns featu an emergency warning flasher control, a turnsign indicating switch with lane change position, and a equipped with an anti-theft device which locks t steering system and, on automatic, transmissi equipped vehicles, the transmission linkage.

DIAGNOSIS AND TESTING

Refer to Part 13-01, General Steering Service.

ADJUSTMENTS

STEERING COLUMN ALIGNMENT

F-100—F-350 AND BRONCO

There is no allignment adjustment of the steering column and coupling shaft. Alignment is maintained by the slip-joint coupling shaft attaching the steering column to the steering gear. If misalignment exists, check for indications of damage, such as bent or displaced components. For proper installation follow procedure per this Part.

Check the flexible coupling for clearance between the slots on the coupling shaft flange and the flexible coupling safety pins (per Fig. 1). The pin to flange clearance should be 0.254mm (0.010 in). If the flexible coupling has been driven in a non-flat condition for more than 10,420 km (12,000 miles), it is recommended that it be replaced during this check.

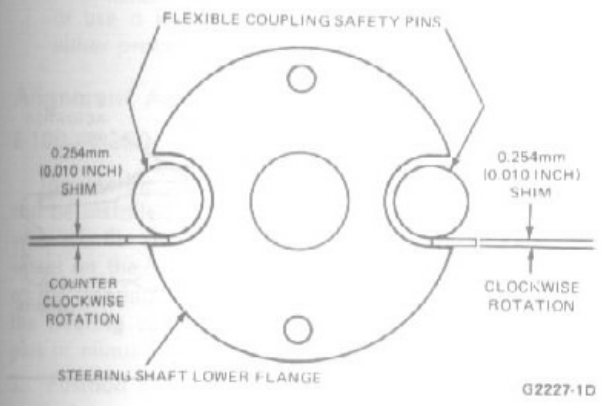

FIG. 1 Flexible Coupling Alignment E-100—E-350

E-100—E-350

Any stress or misalignment in the steering column tube and steering shaft should be eliminated before checking the steering gear adjustments.

1. Remove the steering column trim cover.
2. Loosen the steering column-to-brake and clutch support bracket bolts.
3. Loosen the steering column opening cover plate-to-dash panel bolts. Check the flexible coupling retaining nuts to be sure that they are tight.
4. With the front wheels in the straightahead position, pull the steering column upward until the flexible coupling is in a position between flat and concaved upward (toward steering wheel) 1/10-inch (Fig. 1).
5. Tighten the steering column-to-support bracket bolts.
6. Tighten the steering column opening cover plate-to-dash panel bolts.
7. Insert a 0.254mm (0.010 inch) shim between the flexible coupling right safety pin and steering column lower flange cut-out (Fig. 1) and turn the steering wheel one revolution clockwise.
8. Check to see if the shim is tight (cannot be removed). If the shim is tight, loosen the cover plate clamp and the plate attaching bolts (Fig. 6) and re-align the column until the shim remains loose enough to be removed when rotating the steering wheel.
9. Insert the 0.254mm (0.010 inch) shim between the flexible coupling left safety pin and lower flange cut-out, turn the steering wheel one revolution counter-clockwise, and check as in Step 8.
10. Install the trim cover.

STEERING WHEEL SPOKE POSITION

When the steering gear is on the high point, the front wheels should be in the straight-ahead position, and the steering wheel spokes in their normal position (Fig. 2). If the spokes are not in their normal position when the front wheels are straight ahead, adjust the steering wheel as outlined in this Part.

AUTOMATIC TRANSMISSION SELECTOR INDICATOR

F-100—F-350 AND BRONCO

Before adjusting the automatic transmission selector indicator, adjust the manual linkage to correspond to the insert stop without regard to indicated setting. Adjust the indicator alignment in the following steps. Note: The shroud must be removed.

1. Shift transmission selector to "P". Never adjust the selector with the lever in positions other than specified in this procedure.
2. Place the cable loop over the retainer pin on the shift socket casting. Place the cable bracket in the "T" slot in the column outer tube.
3. Shift the selector to "D" and hold firmly against the internal stop.
4. Adjust cable bracket in slot until indicator is centered on the D.
5. Torque bracket screw to 2.25 N·m (20 in-lb). Release lever.
6. In all other positions, the indicator must touch the shift position letters or numerals.

IGNITION SWITCH ADJUSTMENT

F-100—F-350, E-100—E-350, AND BRONCO

The ignition switch is operated by a rod through the lock actuator rack and pinion driven by the key cylinder. Rotating the key clockwise from the full counter-clockwise stop, the positions are: Accessory, Lock, Off, On, and Start.

If the switch is properly adjusted:

(a) In Accessory, the accessory circuits are operative and the steering wheel is locked.

(b) In Lock, all ignition switch electrical circuits are inoperative and the steering wheel is locked.

(c) In Off, all ignition switch electrical circuits are inoperative and the steering wheel is unlocked for all gear shift lever positions.

(d) In On, all ignition switch circuits are operative except the starter circuit and the steering wheel is unlocked.

(e) In Start, the engine ignition and starter circuits

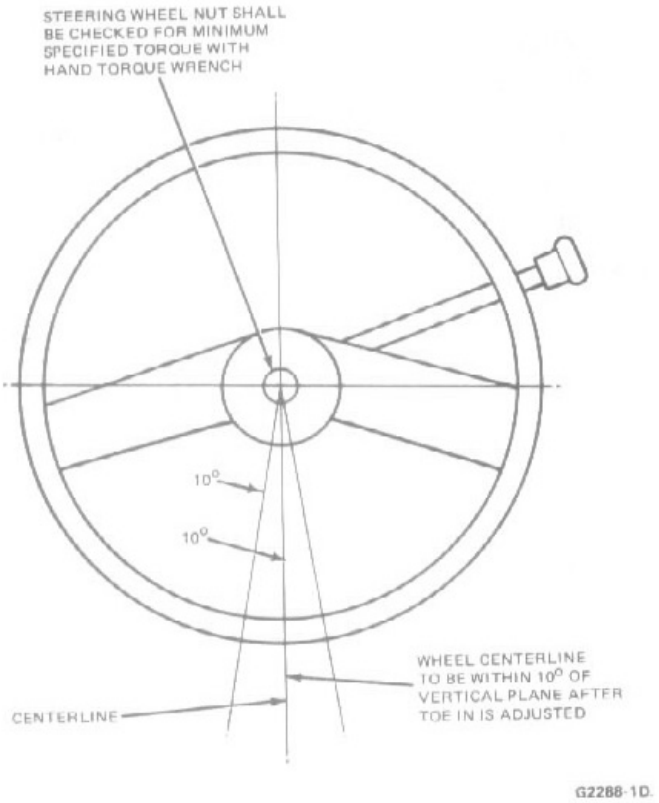

FIG. 2 Acceptable Steering Wheel Installation—Measured From Normal Spoke Angle

only are operative and the steering wheel is unlocked.

(f) The above functions are attainable regardless of direction of actuation.

If the above criteria are not acquired, adjust per procedure below.

1. Select the lock position with the key.
2. Loosen the washer-nuts retaining the ignition switch.
3. Clip the ignition switch through the opening in the side of the switch casting (Fig. 3).
4. Center the switch on the actuation rod.
5. Torque the washer nuts to 4.5-7.3 N·m (40-65 in-lb) and remove the clip.
6. Check for acceptable adjustment.

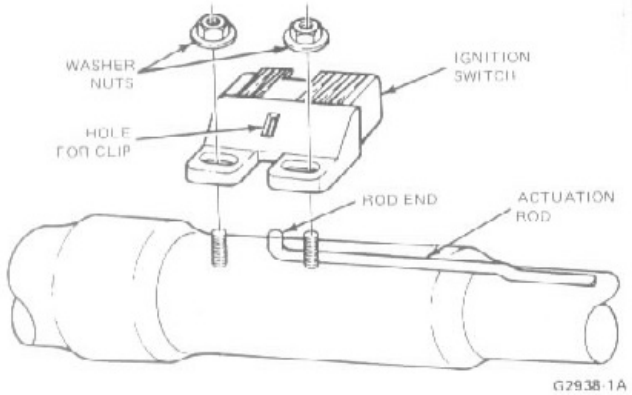

FIG. 3 Ignition Switch Adjustment

REMOVAL AND INSTALLATION

STEERING WHEEL ALIGNMENT FOR CLEAR VISION

F-100—F-350 AND BRONCO

The steering system is indexed with proper toe adjustment. The steering wheel should provide acceptable clear vision. When the front wheels are in the straight ahead position and the steering wheel is properly installed.

To check for proper installation alignment:

1. Remove the 2 screws from the underside of each steering wheel spoke and lift the horn switch (pad) from the wheel. On sport wheels pry the horn pad off with a screwdriver.
2. Check to see that the mark on the steering shaft and the mark on the wheel hub are aligned (Fig. 4).
3. If the marks do not align, remove the wheel and reinstall per this Part.
4. Replace the horn pad and attaching screws, 1.5-2.3 N·m (13-20 in-lb).
5. Determine the high point of the gear by centering the steering wheel lock-to-lock. The front wheels should still be in the straight ahead position and the toe adjusted properly. If required adjust toe per Part 14-01, General Suspension Service.

E-100—E-350

1. Set wheels in straight ahead position by driving vehicle a short distance and mark the steering wheel and steering column relationship with a chalk mark.
2. Note the steering wheel position with toe adjusted on E-Series, if off center (spokes in horizontal position) more than plus or minus 10 degrees in a vertical plane, remove the steering wheel (Fig. 2).

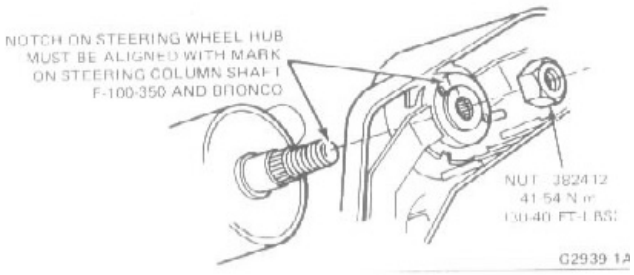

FIG. 4 Steering Wheel Installation

STEERING WHEEL

Removal

1. Park the vehicle with chalk marks aligned.
2. Disconnect the battery ground cable.

3. Remove one screw from the underside of each steering wheel spoke, and lift the horn switch assembly (steering wheel pad) from the steering wheel on vehicles equipped with sport steering wheel option, pry the button cover off with a screwdriver.
4. Disconnect the horn switch wires by pulling the spade terminal from the blade connectors. On vehicles equipped with speed control, squeeze or pinch the "J" clip ground wire terminal firmly and pull it out of the hole in the steering wheel. Do not pull the ground terminal out of the threaded hole without squeezing the terminal clip to relieve the spring retention of the terminal in the threaded hole.
5. Remove the horn switch assembly.
6. Remove steering wheel retaining nut.
7. Use the proper steering wheel removal tool T67L-3600-A and remove steering wheel from shaft. Do not hammer on the steering wheel or center shaft or use a knock-off type steering wheel puller as either procedure will damage the steering column.

Alignment Adjustment

E-100—E-350

The steering wheel has serrations equally spaced and can be installed in any position. Therefore, with front wheels in the straight ahead position install the steering wheel on the steering column so the alignment marks on the steering wheel hub are in line with the marks on the steering column flange. Signal flange 10 degrees plus or minus from horizontal.

1. Position steering wheel into place with retaining nut.
2. Tighten retaining nut to 41-54 N·m (30-40 ft-lb).
3. Connect the spade terminal of the horn switch wire to the blade connector, and press the "J" clip ground terminal fully into the threaded hole.
4. Center the horn switch (pad) on the steering wheel, and install the two attaching screws. If equipped with sport steering wheel option, pop into place by hand or rubber mallet.

F-100—F-350 AND BRONCO

1. Place the steering wheel on the steering column upper shaft, so that the mark on the wheel is in line with the mark on the shaft. Be sure the front wheels are straight ahead when the steering wheel is in the normal position (Fig. 4).
2. Install a service steering wheel lock nut. Torque the nut to 41-54 N·m (30-40 ft-lb).
3. Connect the horn and speed control wires (if equipped).
4. Install the steering wheel horn cover pad. Torque the screws to 1.5-2.5 N·m (3 to 20 in-lb).
5. Connect the negative battery cable to the terminal.
6. Test the steering column for proper operation.

STEERING INTERMEDIATE SHAFT AND FLEX COUPLING

F-100—F-350, Bronco

Removal

Refer to Fig. 5.

1. Remove bolts and nut connecting intermediate shaft to steering column.
2. Remove the cover from the flexible coupling and remove the nut retaining the flex coupling to the steering gear.
3. Remove the intermediate shaft from flex coupling. Remove flex coupling from steering gear.

Installation

1. Install flex coupling to steering gear tighten bolt to 38-47 N·m (28-35 ft-lbs).
2. Position intermediate shaft on flex coupling. Install and tighten nut to 24-28 N·m (17-21 ft-lbs). Place cover over coupling shaft.
3. Attach intermediate shaft to steering column, making sure notch in pot joint is matched to the flat on the column shaft (Fig. 5). Install nut and bolt and tighten to 62-77 N·m (45-57 ft-lbs).

STEERING COLUMN

F-100—F-350 AND BRONCO

Refer to Fig. 5

Removal

Set parking brake before proceeding. Also remove the battery cable from the negative terminal.

1. Remove bolt and nut attaching coupling shaft to steering column.
2. Disconnect shift linkage rod(s) from column.
3. Remove steering wheel per this section. If a tilt steering column is being serviced, the steering wheel must be in the full "UP" position when it is removed, be sure the full "UP" position is attained.
4. Remove the steering column floor opening cover plate screws.
5. Remove shroud by loosening screw at bottom, selecting position "1" on manual 3 speeds and automatics and spreading shroud open, withdrawing out of instrument panel opening, while up and away from column.
6. Remove PRND21 indication actuation cable (automatics).
7. Remove the instrument panel column opening cover.
8. Remove the bolts attaching the column support bracket to the pedal support bracket.
9. Disconnect the turnsignal-hazard warning and ignition switch wiring harnesses.
10. Remove column from vehicle.
11. Remove column support bracket from steering column.

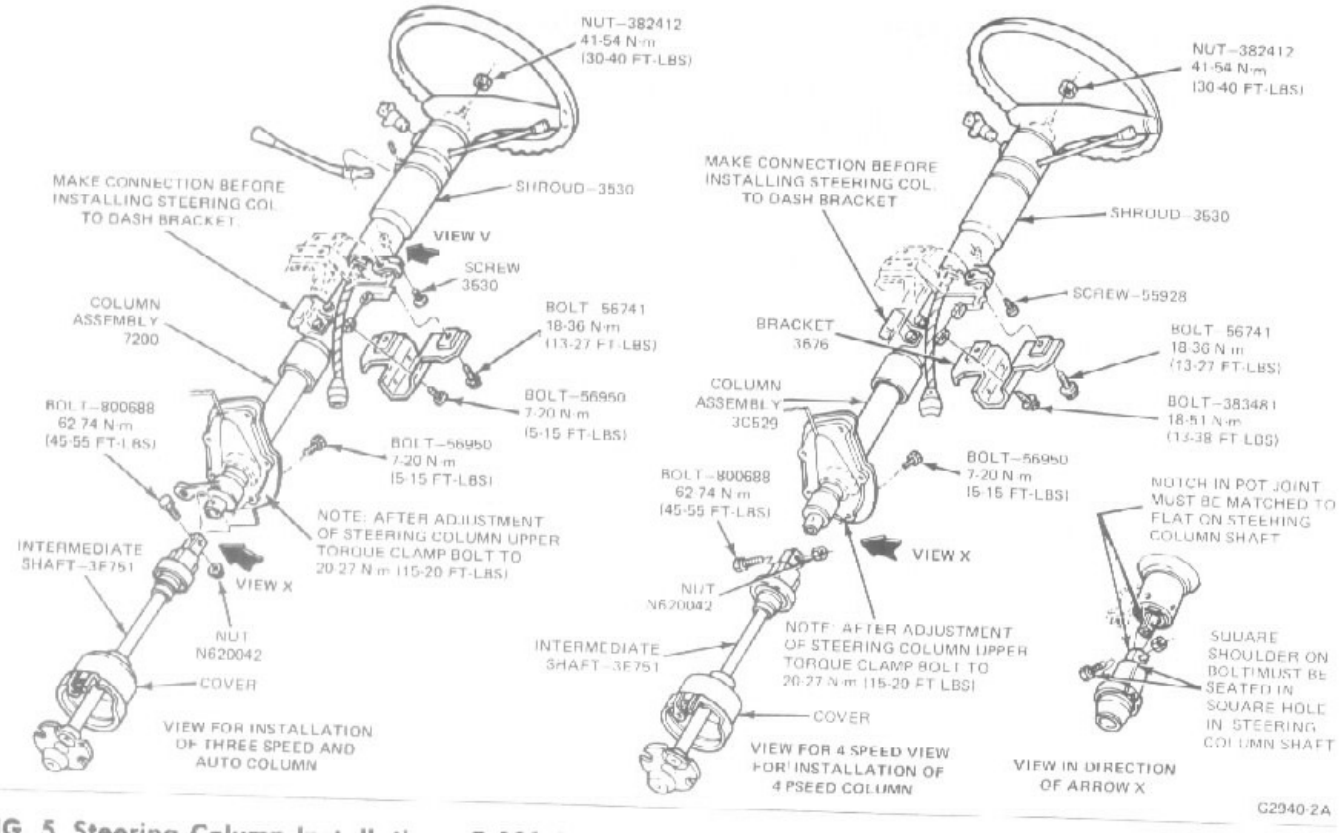

FIG. 5 Steering Column Installation—F-100-350, Bronco

Installation

1. Attach steering column support bracket making sure turnsignal-hazard warning wiring is on outboard side of column. Tighten nuts to 18-51 N·m (13-38 ft-lbs).
2. Hand start the floor opening cover plate clamp bolt and press plate until clamp flats abut stops on column outer tube.
3. Load column into vehicle through opening in floor.
4. Connect turnsignal-hazard warning and ignition switch wiring harnesses.
5. Raise column up to pedal support bracket and hand start the 2 bolts.
6. Fasten floor opening cover plate to floor tighten to 7-20 N·m (5-15 ft-lbs).
7. Tighten the 2 support bracket bolts 18-37 N·m (13-27 ft-lbs).
8. Tighten the cover plate clamp bolt 11-24 N·m (8-18 ft-lbs).
9. Install and adjust the PRND21 indication actuation cable on automatics per this Part.
10. Install instrument panel steering column opening cover.
11. Mount shroud by selecting position "1" on 3-speed manuals and automatic transmissions, spreading shroud around steering column and through opening in instrument panel. Post on interior will index shroud when properly positioned.
12. Tighten screw at bottom of shroud 1.1-1.7 N·m (10-15 in-lbs).
13. Attach shift linkage rod(s) to column.
14. Fasten coupling shaft to steering column tighten to 61-80 N·m (45-59 ft-lbs).

STEERING COLUMN

E-100—E-350

Refer to Fig. 6.

Removal

1. Set the parking brake.
2. Remove the battery cable from the negative post.
3. Remove the 2 nuts attaching the flexible coupling to the steering shaft flange.
4. Remove the shift linkage rod(s) from the column.
5. Remove the steering wheel per this Part. If a tilt steering column is to be serviced, the steering wheel must be in the full "UP" position when it is removed. Be sure the full "UP" position is attained.
6. Remove the steering column floor opening cover plate screws.
7. Remove the shroud by pulling the shroud tabs out of the clip at the bottom of the column.
8. Remove the instrument cluster column opening cover.
9. Remove the 2 bolts attaching the column bracket to the pedal support bracket.
10. Disconnect the turnsignal-hazard warning and ignition switch wiring harnesses.
11. Remove the steering column.

Installation

1. Place the steering column in the vehicle.

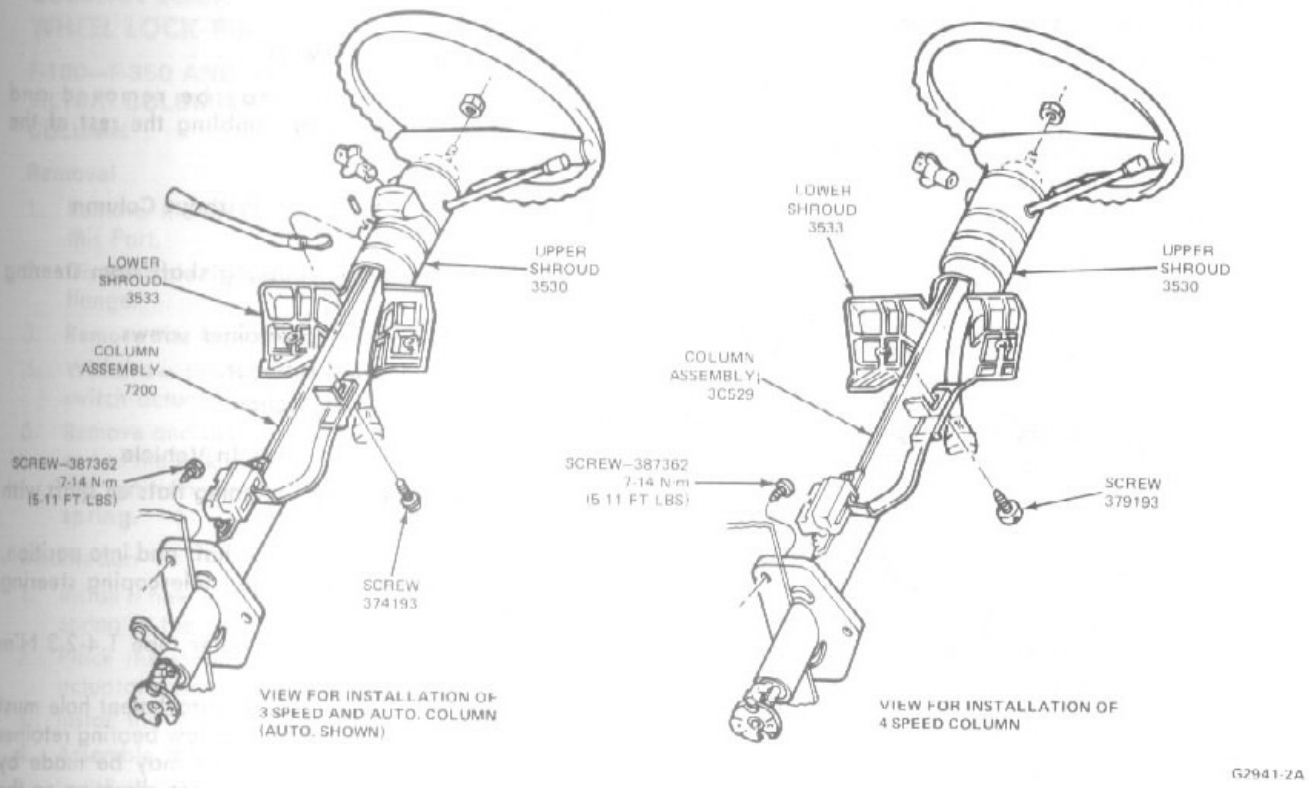

FIG. 6 Steering Column Installation—E-100-350

2. Connect the turnsignal-hazard warning and ignition switch wiring harnesses.
3. Inserting the steering shaft flange through the floor opening such that the flange engages the flexible coupling, raise the steering column up to the pedal support bracket. Loose install the column support bolts.
4. Loose install the flexible coupling-flange fasteners, and floor plate fasteners.
5. Install the steering wheel and align per this Part.
6. Align the steering column and flexible coupling per this Part.
7. Attach the shift linkage rod(s).
8. Connect the battery.

UPPER COMPONENTS NON-TILTING STEERING COLUMN UPPER SHAFT BEARING, FLANGE, AND SHIFT SOCKET/ FLANGE EXTENSION

E-100—E-350

Removal

The above mentioned components for these columns can be serviced without removing the column from the vehicle.

1. Set the parking brake.
2. Disconnect the battery cable from the negative terminal.
3. Remove the steering column shroud and instrument panel opening cover.
4. Disconnect the turnsignal-hazard warning and ignition switch electrical connections.
5. Clip the ignition switch in the lock position and remove the switch.
6. Remove the steering wheel per this Part.
7. If the shift socket is to be removed, drive out the pivot pin and remove the lever on manual 3 speed and automatic transmissions.
8. Remove the turnsignal lever.
9. Remove the hood and PRND21 lens on automatic transmissions.
10. Remove the screws from the turnsignal-hazard warning switch and slip the switch off the steering shaft.
11. Remove the snap ring from above the steering shaft upper bearing.
12. Loosen the nuts retaining the flange casting to the column until one or two threads on each remain engaged. Pinching the nuts toward each other withdraw the flange from the steering column. Some tapping on the steering shaft upper end with a light hammer may be required.
13. Remove the bearing and insulator tube by driving out from the opposite side of the flange.
14. Remove the shift tube retaining screw at the bottom of the shift socket on 3 speed manual and automatic transmissions and withdraw the shift socket.
15. Remove the 3 flange extension retaining screws and remove the extension on 4-speed manual transmissions.

Installation

1. Install the shift socket on 3-speed and automatics or flange extension on 4-speeds.
2. Place the flange on the steering column tube and torque nuts to 6.8-8.5 N·m (60-75 in-lbs).
3. Prick punch the shaft serration diameter to insure an interference fit to the inner race. Place the bearing and insulator on the shaft, working them as far down the shaft as possible. Place a piece of pipe (19.05mm 1.0 x 53.97mm inch long) over the end of the shaft.
4. Install the steering wheel attaching nut (Fig. 7). Tighten the nut until the bearing is seated in the flange. Remove the nut and pipe from the shaft.

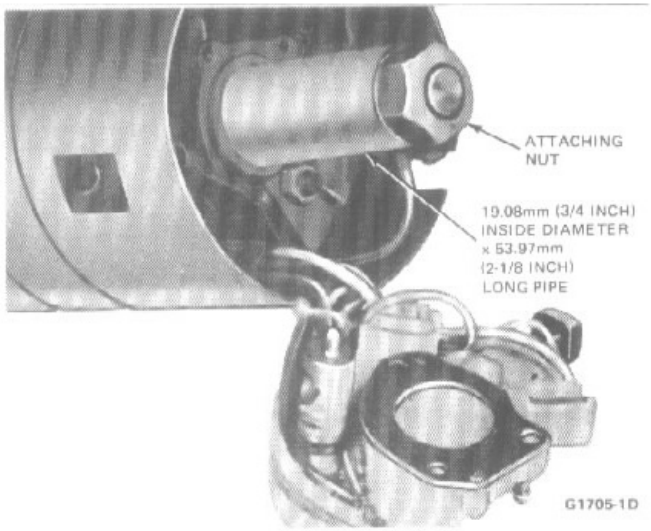

FIG. 7 Installing Upper Bearing—Fixed Columns

5. Install the snap ring in the groove on the shaft.
6. Install the turn indicator switch on flange. Torque the screws on 2.5-3.0 N·m (20-30 in-lbs).
7. Install the turn indicator lever.
8. Connect the electrical connections to the steering column.
9. Install the steering wheel as outlined in this Part.
10. Connect the negative battery cable to the terminal.
11. Test the steering column for proper operation.

F-100-350 AND BRONCO

To facilitate service of upper steering column components, steering column removal and disassembly is recommended. Refer to this part for steering column removal and disassembly procedures.

F-100—F-350, E-100—E-350, AND BRONCO

Tilt Column Upper Shaft, Bearings, Flange Castings, And Shift Socket/Flange Extension

To facilitate service of these steering column components, steering column removal and disassembly is recommended. Refer to this Part for steering column removal and disassembly procedures.

STEERING COLUMN LOWER BEARING RETAINER

F-100—F-350 AND BRONCO

The bearing retainer may be removed and disassembled without disassembling the rest of the column.

Removal—From The Vehicle Without Column Disassembly

1. Disconnect steering coupling shaft from steering column.
2. Remove the 3 bearing retainer screws.
3. Remove the bearing retainer.
4. Disassemble per this section.

Installation—While Column Is In Vehicle

1. Install on steering shaft aligning flats on shaft with flats on shaft retainer.
2. Slide bearing retainer onto shaft and into position, being careful not to shorten telescoping steering shaft.
3. Fasten retainer to column outer tube 1.4-2.3 N·m (12-20 in-lbs).
4. Centerline of coupling shaft attachment hole must extend 20.3mm (0.8 inches) below bearing retainer lower face. Minor adjustments may be made by gentle tapping in the appropriate direction on the shaft.
5. Attach the coupling shaft tighten to 61-80 N·m (45-59 ft-lbs).

STEERING COLUMN FLOOR OPENING COVER PLATE

F-100—F-350 AND BRONCO

Removal

1. Remove the steering column from the vehicle per this section.
2. Remove the lower bearing retainer per this section.
3. Remove the shift tube retension bolt on automatic transmissions.
4. Drive out the shift lever pivot pin and remove the shift lever on manual 3-speeds.
5. Partially withdraw the shift tube assembly on 3-speed and automatic transmissions.
6. Remove the cover plate clamp and remove cover plate.

Installation

1. Install cover plate on steering column outer tube such that the dished surface is "up-column". Reinstall clamp ensuring clamp engages cover plate tabs and clamp flanges are against stops on the column outer tube.
2. Hand start the clamp bolt.
3. Reverse the removal procedure.

COLUMN LOCK ACTUATOR AND STEERING WHEEL LOCK PIN

F-100—F-350 AND BRONCO TILTING AND NON-TILTING COLUMN AND E-100—E-350 TILTING COLUMN

Removal

1. Remove the steering column from the vehicle per this Part.
2. Disassemble the column per this Part to remove the flange.
3. Remove the lock drive gear detailed in this Part.
4. Withdraw the steering wheel lock pin—ignition switch actuator assembly.
5. Remove and discard the retaining clip at the lower end of the lock pin. Remove the pin and spring from the ignition switch actuator. **Do not lose the spring.**

Installation

1. Install a new lock pin and clip, and the old lock pin spring in the actuator.
2. Place the steering wheel lock pin-ignition switch actuator assembly in the flange casting.
3. Install the lock drive gear per this Part.
4. Assemble the column per this Part.
5. Install the steering column per this Part.

E-100—E-350 Non-Tilting Column

Removal

1. Remove the steering column shroud.
2. Remove the lock drive gear as detailed in this Part.
3. Disconnect the PRND21 cable.
4. Remove the attaching nuts that hold the steering column to brake pedal support.
5. Loosen the ignition switch attaching nuts and remove the ignition rod from the switch end.
6. Remove the upper shaft bearing as detailed in this Part.
7. Remove the ignition lock actuator rod and steering wheel lock pin assembly (Fig. 8).
8. Remove and discard the retaining clip at the lower end of the steering wheel lock pin. Remove the steering wheel lock pin and lock pin spring from the ignition switch actuator. Do not lose the spring.

Installation

1. Install a new lock pin and clip, and the old lock pin spring in the actuator casting.
2. Place the actuator and steering wheel lock pin in the steering column.
3. Engage actuator rod into ignition switch. Do not tighten switch retaining nuts.
4. Install the lock drive gear, bearing and snap ring.
5. Install the lock cylinder with the key in the ON position. Install with the retaining pin flush with cylinder. Turn key to the OFF position.
6. Install the upper shaft bearing as detailed in this Part.
7. Adjust the ignition switch as explained in this Part.
8. Secure the steering column to the brake pedal support.
9. Connect the PRND21 cable.
10. Install the trim shroud.

IGNITION LOCK CYLINDER ASSEMBLY

NOTE: THE FOLLOWING PROCEDURE PERTAINS TO VEHICLES THAT HAVE FUNCTIONAL LOCK CYLINDERS AND IGNITION KEYS ARE AVAILABLE OR THE IGNITION KEY NUMBERS ARE KNOWN AND THE PROPER KEY CAN BE MADE.

FIXED STEERING COLUMN

Removal

1. Disconnect the battery ground cable.
2. Remove the steering wheel trim pad and the steering wheel as described earlier in this Part.
3. Place the gear shift in PARK (with automatic transmission) or in any position with manual transmission and turn the lock cylinder with the ignition key to ON position.
4. Place 3.17mm (1/8 inch) diameter wire pin or small drift punch in the hole located inside the column near the base of the lock cylinder housing and depress the retaining pin while pulling out on the lock cylinder to remove it from the column housing.

Installation

1. To install the lock cylinder, turn the lock cylinder to the ON position and depress the retaining pin, then insert the lock cylinder into its housing in the flange casting. Assure that the cylinder is fully seated and aligned into the interlocking washer before turning the key to the OFF position. This action will permit the cylinder retaining pin to extend into the cylinder cast housing hole.
2. Using the ignition key rotate the lock cylinder to insure correct mechanical operation in all positions.
3. Install the steering wheel and trim pads as described earlier in this section.
4. Connect the battery ground cable.
5. Check for proper start in Park or Neutral. Aslo check to make certain that the start circuit cannot be actuated in the Drive and Reverse positions.

Tilt Steering Column

Removal

1. Disconnect the battery ground cable.
2. Place the gear shift in PARK position and turn the lock cylinder with the ignition key to the ON position.
3. Insert 3.17mm (1/8 inch) diameter wire pin or a small drift punch in the hole located on the outside of the steering column casting adjacent to the hazard flasher button (Fig. 9).
4. Depress the drill punch or wire pin and pull out on the lock cylinder to remove the lock cylinder from the steering column housing.

Installation

1. To install the lock cylinder, turn the lock cylinder to the ON position and depress the retaining pin, then

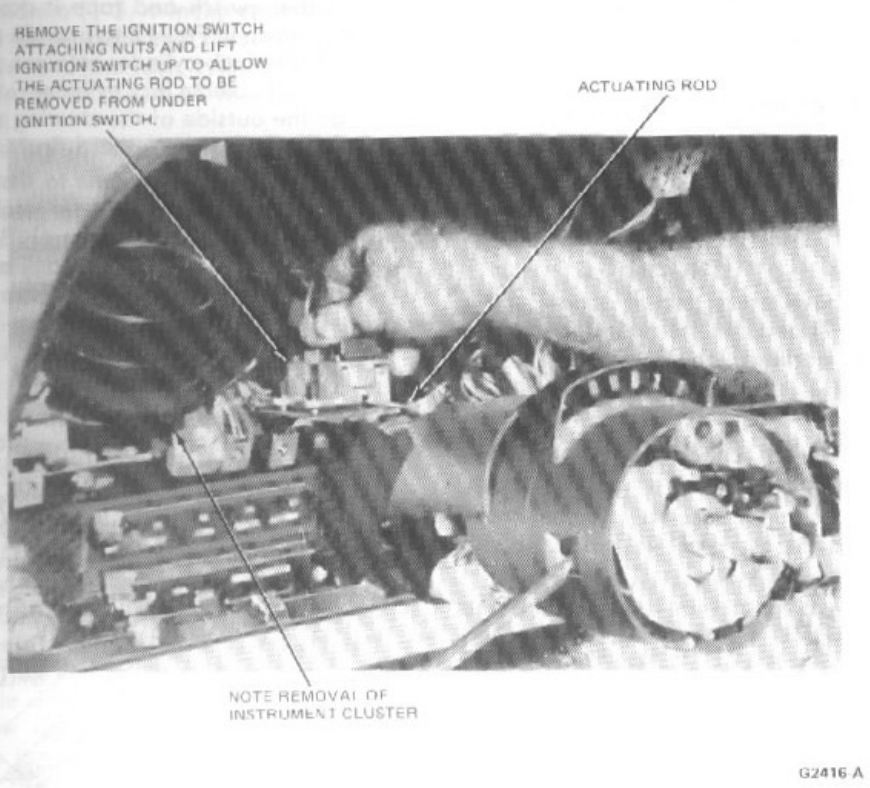

FIG. 10 Removing Ignition Switch

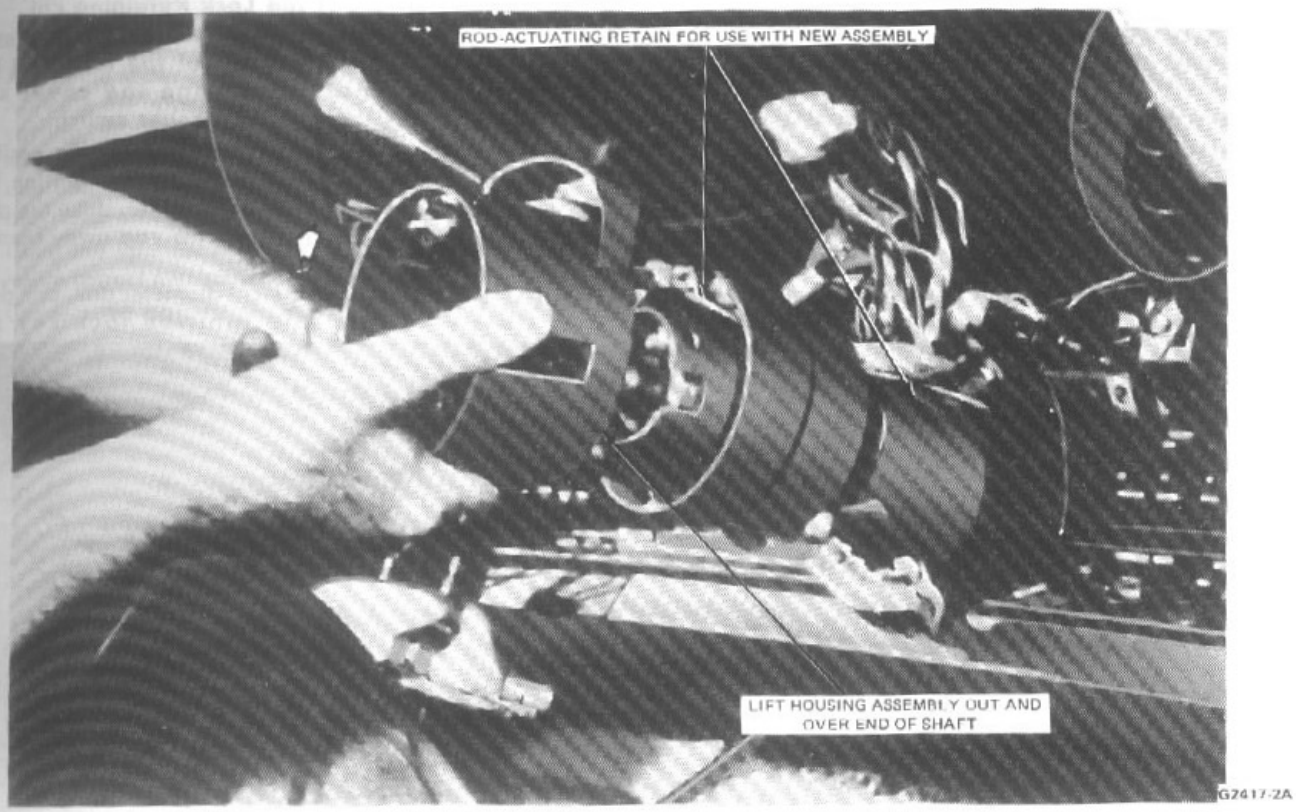

FIG. 11 Removing Flange Casting

(1) 3E700 Bearing, Steering Column Lock

(1) 3C610 Retainer, Steering Column Upper Bearing

(1) 3E723 Actuator Assembly, Steering Column Lock

NOTE: Retain the ignition switch actuating rod from the removed casting assembly and use it with the new flange casting assembly.

Installation

1. Reassemble the above parts, install a new upper shaft bearing (3517) and set the actuator to drive gear as described earlier in this section.
2. Install the turn signal switch as described earlier in this section.
3. Install the ignition switch, check and/or adjust for proper function as specified in Part.
4. Install the steering column assembly to the brake pedal support bracket as specified earlier in this section.
5. Install the steering column trim shrouds, steering wheel and pad assembly as specified earlier in this section.
6. Install the turn signal lever.
7. Using the ignition key, rotate the lock cylinder to insure correct mechanical operation in all positions.
8. Connect the battery ground cable.
9. Check for proper start in Park and Neutral. Also check to make certain that the start circuit cannot be actuated in the Drive and Reverse positions.

Steering Column

Removal

1. Disconnect the battery ground cable. Remove the steering column trim shrouds as described earlier in this section.
2. Tape the gap between the steering wheel hub and the cover casting. Cover the entire circumference of the casting. Also cover the adjacent seat and floor area with a suitable covering to protect the surrounding interior upholstery. Pull out the hazard flasher switch and tape it down toward the floor as shown in Fig. 12 to provide clearance for drilling out the lock cylinder retainer pin.
3. The tilt column lock cylinder retaining pin is located on the outside of the steering column cover casting adjacent to the hazard flasher button.
4. Tilt the steering column to the full up position and prepunch the lock cylinder retaining pin with a prick punch. Using a 3.17mm (1/8 inch) diameter drill with a right angle drive drill out the retaining pin, going no deeper than 12.7mm (1/2 inch). (Fig. 13.)

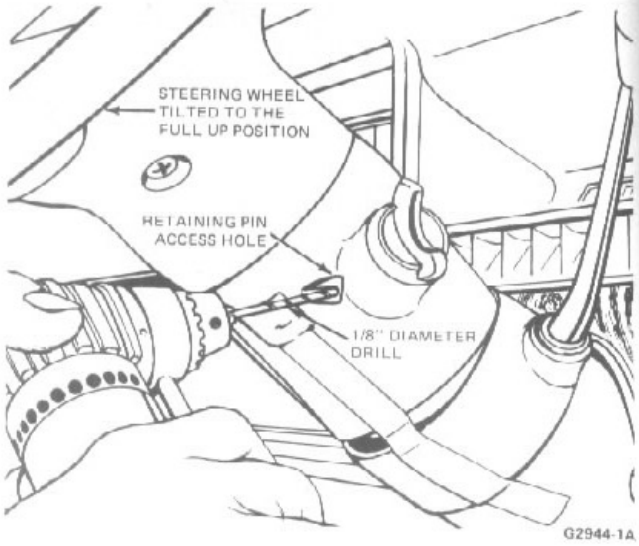

FIG. 13 Drilling Out the Lock Retaining Pin

NOTE: When drilling out the retaining pin, take care not to damage the cover cast housing or the hazard flasher switch.

5. Tilt the steering column to the full down position. Place a chisel at the base of the ignition lock cylinder cap, and, using a hammer, strike the chisel with sharp blows to break the cap away from the lock cylinder. (Fig. 14.)
6. Using a 9.8mm (3/8 inch) diameter drill, drill down the middle of the ignition lock key slot

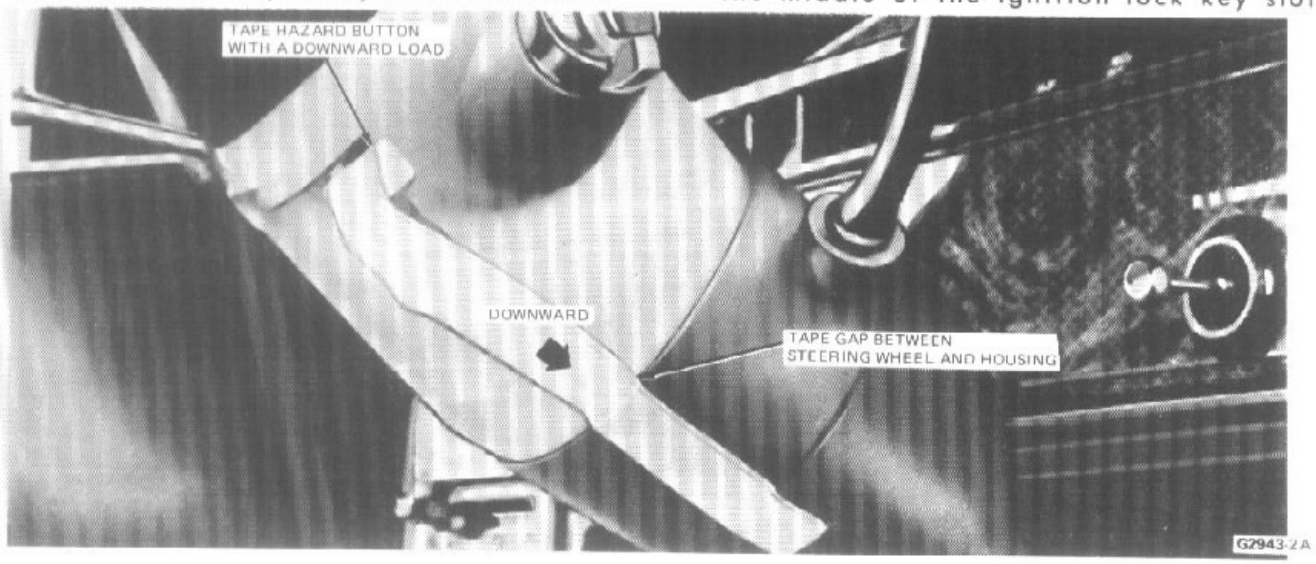

FIG. 12 Taping Hazard Switch

approximately 45mm (1-3/4 inch) until the lock cylinder breaks loose from the steering column cover casting. Remove the lock cylinder, and the drill shavings from the base of the cover cast housing (Fig. 15).

7. Remove the steering wheel and pad as described earlier in this Part.
8. Remove the turn signal lever from the column and then remove the (2) attaching screws from the turn signal switch and (1) attaching screw from the key warning buzzer terminal. Lift the turn signal switch up and over the end of the steering shaft but do not disconnect it from the wiring harness.
9. Remove the (4) attaching screws from the cover casting and lift the casting over the end of the steering shaft allowing the turn signal switch to pass thru the cover casting. The removal of the cover casting will expose the upper actuator (3E723). Remove the upper actuator.
10. Remove the drive gear, snap ring and washer from the cover casting along with the upper actuator mentioned above. Thoroughly clean the components in an acceptable cleaning solution. Carefully inspect all components for any damage resulting from the drilling operation. If any of the components show signs of damage they must be replaced. Clean the removed cover casting with compressed air to remove any drill shavings or foreign particles and carefully inspect it for damage. If the cover casting is damaged, replace it with a new one primed and painted to match the existing column.

Installation

1. Attach the upper actuator to the lower actuator and lubricate the upper actuator. Reassemble the cover casting, upper actuator, turn signal switch and lever, lock drive gear, lock cylinder, steering wheel and pad, and the steering column trim shrouds as described earlier in this Part.
2. Using the ignition key, rotate the lock cylinder to insure correct mechanical operation in all positions.
3. Connect the battery ground cable.

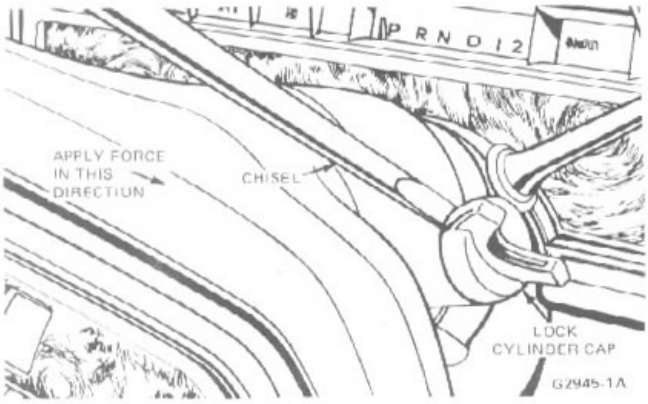

FIG. 14 Breaking The Cap Away From The Lock Cylinder

4. Check for proper start in Park or Neutral. Also check to make certain that the start circuit cannot be actuated in the Drive and Reverse positions.

IGNITION LOCK DRIVE GEAR—FIXED OR TILT COLUMNS

Removal

1. Remove the lock cylinder assembly as detailed in this Part.
2. Insert a flat bladed screwdriver in the recess of the drive gear at the bottom of the lock cylinder housing. Turn the lock drive gear counterclockwise three notches.
3. Remove the snap ring, washer and lock drive gear from the lock cylinder housing. Note the position of the drive gear to the rack teeth.

Installation

1. Install the lock drive gear in the housing in the same position as noted during removal. Installation is correct if the last tooth on the drive gear is meshed with the last tooth on the rack. Install the washer and snap ring.

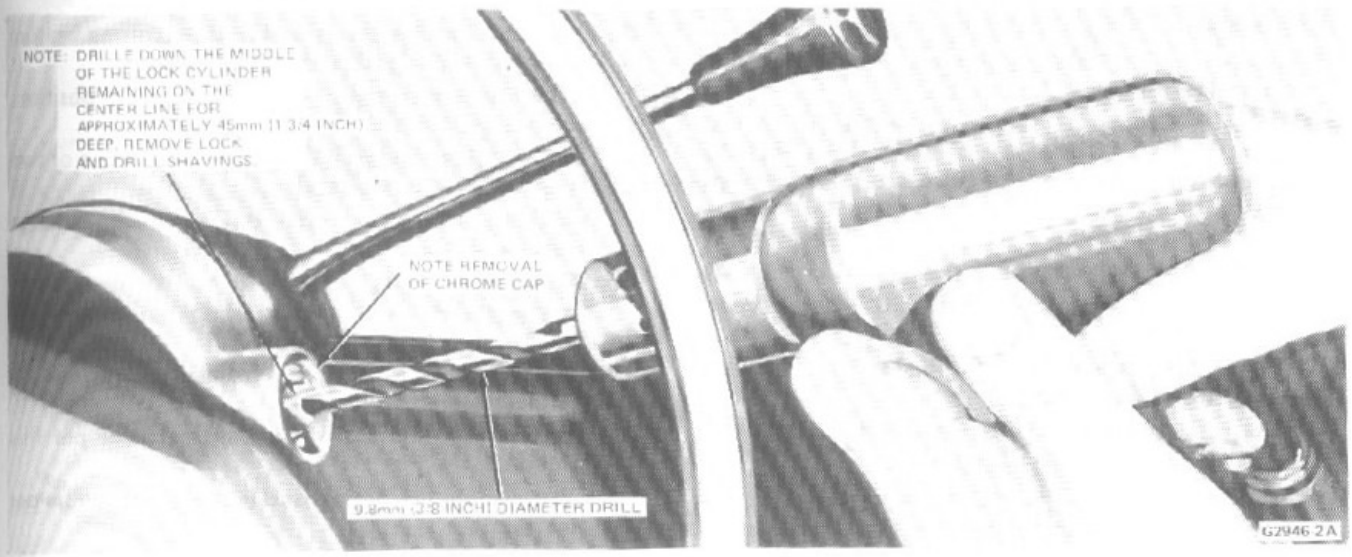

FIG. 15 Drilling Out the Cylinder

insert the lock cylinder into its housing in the flange casting. Assure that the lock cylinder is fully seated and aligned into the interlocking washer before turning the key to the OFF position. This action will permit the cylinder retaining pin to extend into to cylinder cast housing hole.

2. Using the ignition key rotate the lock cylinder to insure correct mechanical operation in all positions.
3. Connect the battery ground cable.
4. Check for proper start in Park and Neutral. Also check to make certain that the start circuit cannot be actuated in the Drive and Reverse positions.

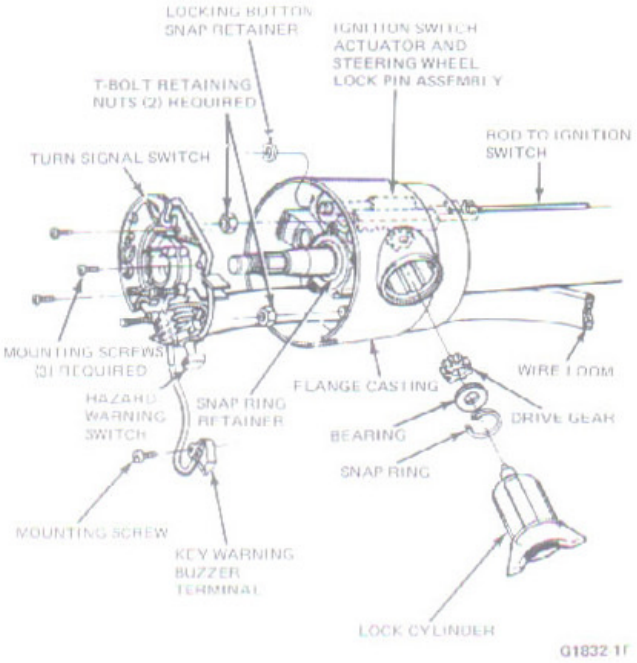

FIG. 8 Fixed Column Mechanism

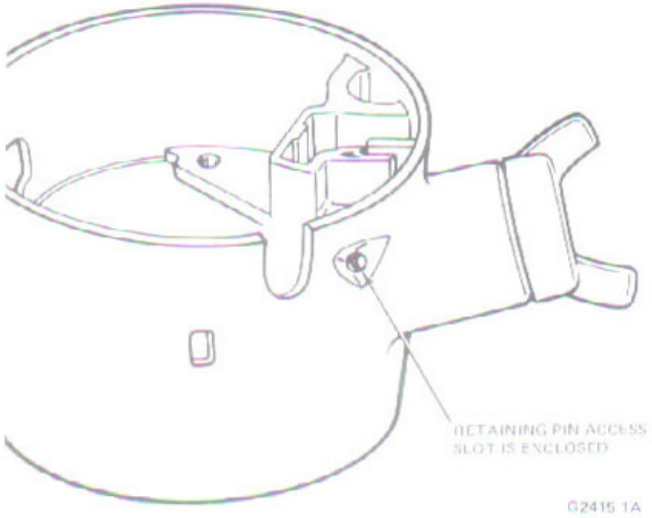

FIG. 9 Lock Retaining Pin Access Slot

NOTE: THE FOLLOWING PROCEDURE APPLIES TO VEHICLES WHERE THE IGNITION LOCK IS INOPERATIVE AND THE LOCK CYLINDER CANNOT BE ROTATED DUE TO A LOST OR BROKEN IGNITION KEY AND THE KEY NUMBER NOT KNOWN OR THE LOCK CYLINDER CAP IS DAMAGED AND/OR BROKEN TO THE EXTENT THAT THE LOCK CYLINDER CANNOT BE ROTATED.

F-100—F-350 AND BRONCO. Non Tilting Column

Removal

1. Remove the steering column from the vehicle per this Part.
2. Disassemble the column to remove the flange per this Part.
3. Remove the lock actuator insert, the T-Bolts, and the PRND21 insert on automatic transmission or the key release lever assembly manual 3 and 4-speeds.
4. Replace the remaining flange components with the following new ones:
   (1) 3511 Flange
   (1) 11582 Lock Cylinder Assembly
   (1) 3E717 Gear, Steering Column Lock
   (1) 3E700 Bearing, Steering Column Lock
   (1) 3C610 Retainer, Steering Column Upper Bearing
   (1) 3E723 Actuator Assembly, Steering Column Lock.

Installation

1. Assembly flange and locking mechanism per this Part.
2. Assemble column per this Part.
3. Install the steering column per this Part.

E-100—E-350 Fixed Steering Column

Removal

1. Disconnect the battery ground cable.
2. Remove the steering wheel and pad assembly as described earlier in this Part.
3. Remove the turn signal lever from the steering column.
4. To gain access to the ignition switch remove the steering column trim shrouds from the steering column. Detach and lower the steering column assembly from the brake pedal support bracket as described earlier in this Part.
5. Remove the ignition switch and pin it in the "Lock" position as described in this Part (Fig. 10).
6. Remove the turn signal switch from the column assembly as described in this Part.
7. Remove the upper bearing snap ring and the (2) T-bolt retaining nuts that secure the flange casting to the outer tube. Remove the entire flange casting assembly, the upper shaft bearing, the lock cylinder assembly, the ignition switch actuator and the ignition switch actuator rod by pulling the assembly over the end of the steering column shaft (Fig. 11).
8. Replace the above assembly with a new assembly consisting of:
   (1) 3511 Flange
   (1) 11582 Lock Cylinder Assembly
   (1) 3E717 Lock Gear, Steering Column Lock

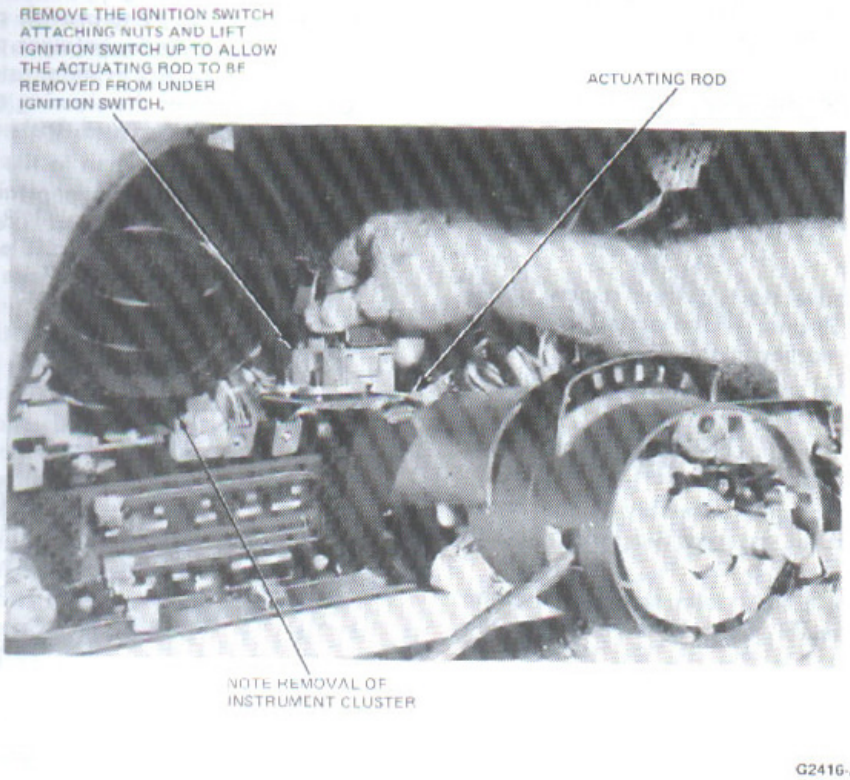

FIG. 10 Removing Ignition Switch

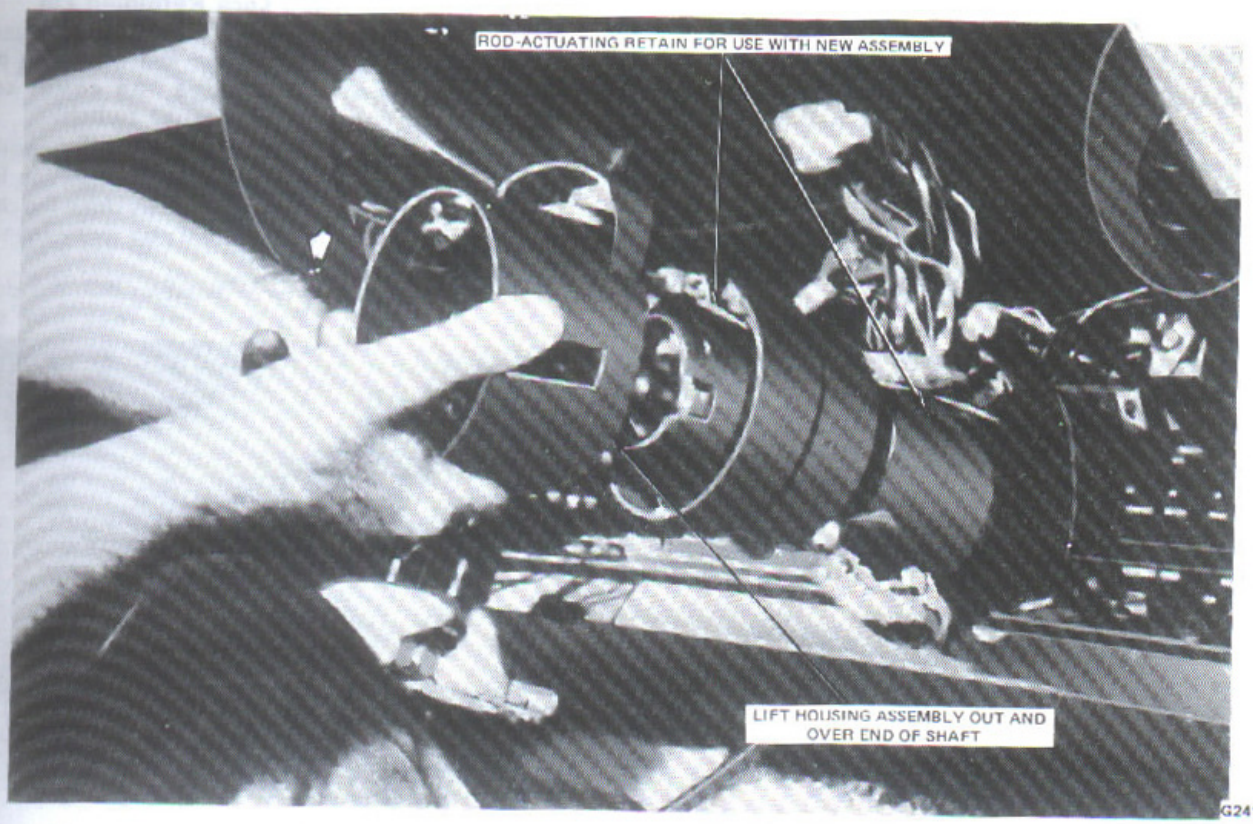

FIG. 11 Removing Flange Casting

2. Using the screwdriver blade, turn the drive gear clockwise three notches.
3. Install the lock cylinder.

MANUAL TRANSMISSION KEY RELEASE BUTTON AND LEVER

Refer to Fig. 16.

NOTE: F-100—F-350 MANUAL 3 SPEED TRANSMISSION EQUIPPED VEHICLES REQUIRE THE COLUMN TO BE REMOVED FROM THE VEHICLE TO SERVICE THESE COMPONENTS.

Removal

1. Remove the steering wheel per this Part.
2. Remove the shroud. Remove the flange per this Part (Manual 3 Speed only).
3. Remove the 3 screws retaining the flange extension. Allow the extension to slide down the column. (Manual 4 speed only).
4. Remove the turn signal lever (non-tilt only).
5. Remove the turn signal-hazard warning switch retaining screws. Withdraw the switch from the flange, over the steering shaft, and allow it to hang (non-tilt only).
6. Remove and discard the snap ring from the release lever pivot pin.
7. Remove the lever and spring from the flange casting.
8. Remove the spring from the lever.

Installation

1. Install the spring to the release lever.
2. Install the lever and spring on to the flange making certain that the spring is against the flange providing the automatic return of the lever.
3. Install a new snap ring.
4. Install the flange per this Part.
5. Install the turn signal-hazard warning switch (non-tilt) torque screws to 1.7-2.8 N·m (15-25 in-lbs).
6. Install the flange extension. Torque screws to 1.1-2.2 N·m (10-20 in-lbs) (tilt) extension 1.7-2.5 N·m (15-22 in-lb).
7. Install the turn signal lever. Torque to 3.4-5.1 N·m (30-45 in-lbs).
8. Install the steering wheel per this Part.

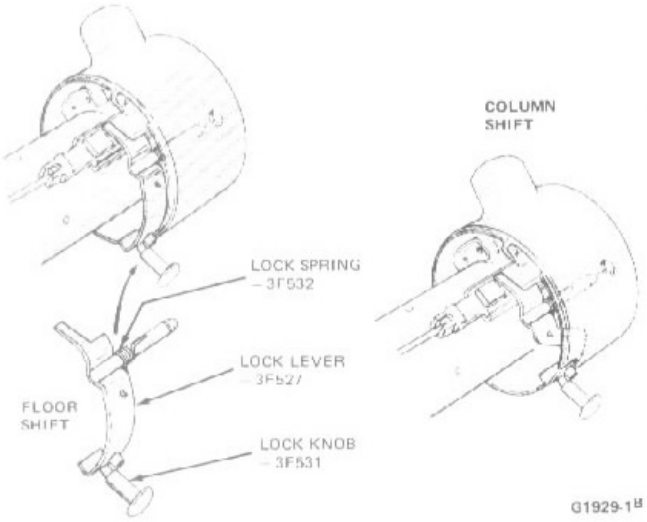

FIG. 16 Locking Button Installation for Non Tilt columns

DISASSEMBLY AND ASSEMBLY

NON-TILTING STEERING COLUMN

F-100—F-350 and Bronco

Refer to Figs. 17, 18, and 19.

Disassembly

1. Remove column from vehicle per this section and clamp in vise.

   NOTE: **Clamping is permitted only on the upper tube. Care is to be taken not to permanently deform the tube wall. Permanent deformation may affect column performance during an accident.**
2. Remove turn signal lever.
3. Drive out pivot pin and remove shift lever (3-speed and automatics).
4. Partially withdraw turn signal-hazard warning switch from upper flange.
5. Remove snap ring from steering shaft.
6. Remove lower bearing retainer.
7. Using a light hammer, gently drive the steering shaft out the bottom of the steering column.

   NOTE: Because the steering shaft is a two-piece telescoping type, harsh impacts at either end may alter the shaft in overall length, thus affecting assembly.
8. Remove shift tube retaining screw from bottom of shift socket on automatic transmissions.
9. Withdraw shift tube assembly from column bottom on manual 3-speed and automatics.
10. With the ignition switch clipped in the lock position, remove switch and actuation rod.
11. Loosen upper flange retention nuts until one or two threads remain engaged.
12. Pinching nuts toward each other, withdraw flange from outer tube.
13. Remove shift socket (3-speed and automatics) or flange extension on manual 4-speeds, from outer tube.
14. Remove bearing and tire from upper flange by gentle tapping from opposite side.
15. Disassemble the lower bearing retainer per this section.
16. Disassemble the flange and locking mechanism per this section.
17. Disassemble the shift tube per this section (3-speeds).

Assembly

1. Place bushing in socket retainer in outer tube (3-speed).
2. Place bushing on upper hub and wave washer on lower hub of shift socket (3-speed).
3. Install shift socket in outer tube (3-speed automatics).
4. Install flange extension on outer tube (manual 4-speed).
5. Subassemble flange per this section.
6. Place wave washer in flange hub on automatics.
7. Install subassembled flange onto outer tube by pinching nuts toward each other and pressing flange in place. Retaining bolt "T" head will engage cutouts in outer tube as the nuts are drawn tight. Tighten to (60-75 in-lbs).
8. Subassemble shift tube assembly per this section (M3), and load up through column lower opening.
9. Install shift tube retaining screw through bottom of shift socket on automatics and tighten to 4.0-5.6 N·m (35-50 in-lbs).
10. Install steering shaft clip below knurl for upper bearing.
11. Check shaft assembly length to be 90.42 cm (35.6 in). Adjust by gentle tapping in the appropriate direction.
12. Load shaft up through bottom of column taking care not to collapse steering shaft.
13. Place upper bearing tire onto bearing and press onto knurl on steering shaft until snap ring groove is visible above bearing.
14. Install snap ring.
15. Install turn signal-hazard warning switch and tighten to 1.7-2.8 N·m (15-25 in-lbs).
16. Subassemble lower bearing retainer per this section.
17. Install lower bearing retainer making sure that the centerline of the coupling shaft attachment hole extends 20.3mm (0.8 in.) below the lower face of the retainer and tighten to 1.4-2.3 N·m (12-20 in-lbs). Minor adjustments in length can be made by gently tapping the shaft in the appropriate direction.
18. Install the ignition switch actuation rod.
19. Mount the ignition switch and hand start the switch retaining nuts with the lock cylinder in lock position.
20. Tighten the switch retaining nuts to 4.5-7.3 N·m (40-65 in-lbs), and remove clip.
21. Install the shift lever and secure by driving in the pivot pin.
22. Install the turn signal switch lever and tighten to 3.4-5.1 N·m (30-45 in-lbs).

NON-TILTING STEERING COLUMN

E-100—E-350

Refer to Figs. 20 and 21.

Disassembly

1. Remove the steering column per this section.
2. Remove the turn signal switch lever.
3. Drive out shift lever pivot pin and remove shift lever on 3-speed and automatic transmissions.
4. Remove turn signal-hazard warning switch retaining screws and partially withdraw switch from flange.
5. Remove snap ring from steering shaft above bearing.
6. With a light hammer tap the steering shaft out the bottom of the steering column.
7. Clip the ignition switch in lock position and remove ignition switch and actuation rod.
8. Remove the PRND21 hood and lens assembly on automatics.
9. Loosen the upper flange retaining nuts until 1 or 2 threads remain engaged, pinch the nuts toward each other, and pull flange off outer tube.
10. Remove shift tube retaining bolt from the bottom of the shift socket on automatics.
11. Remove the shift socket on manual 3 speeds and automatics or flange extension on 4 speeds.

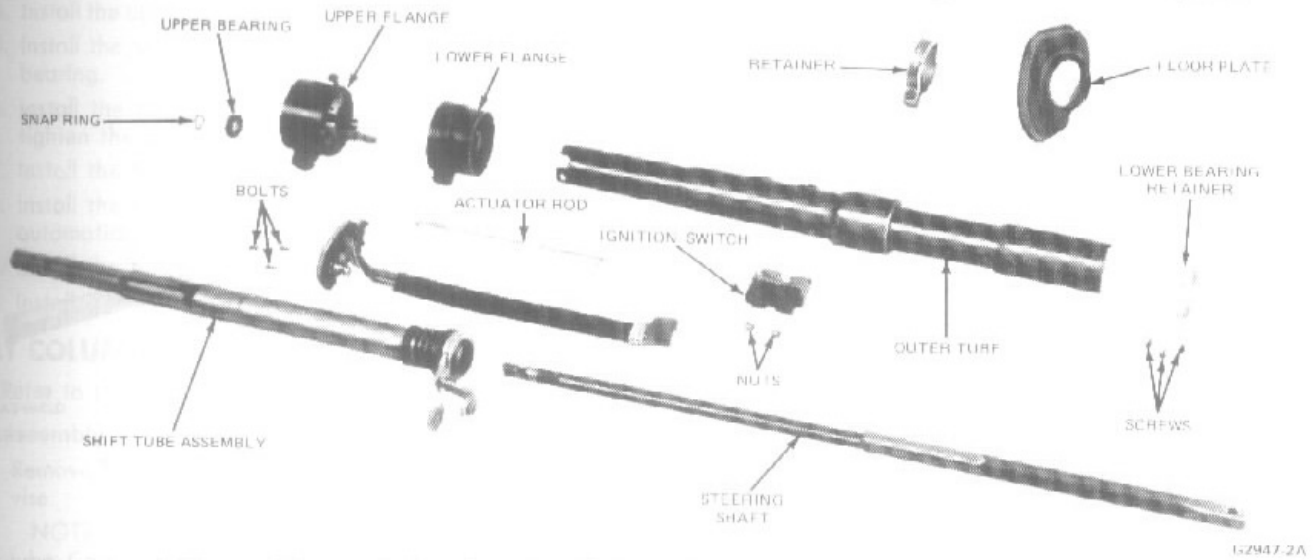

FIG. 17 3-Speed Manual Transmission Steering Column Exploded View—F-100—F-350 and Bronco

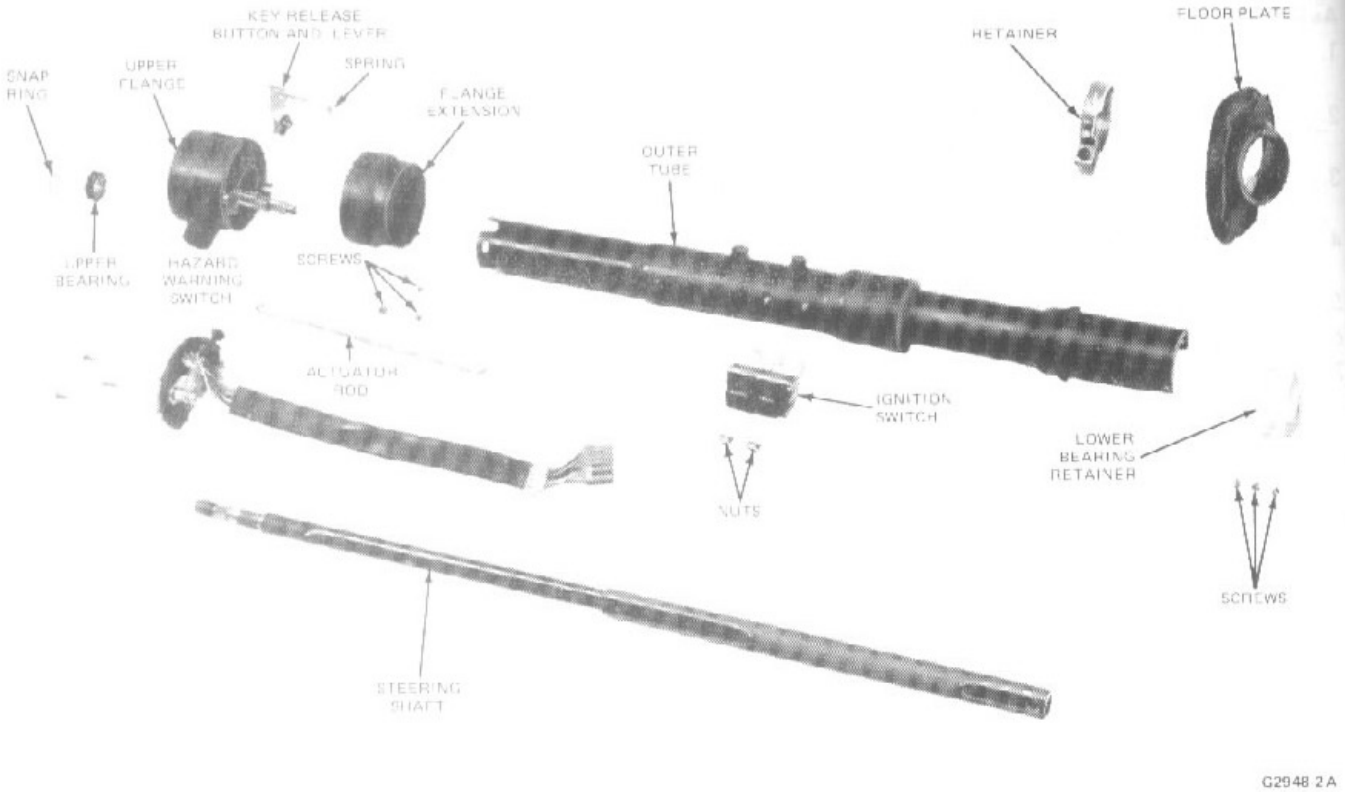

FIG. 18 4-Speed Manual Transmission Steering Column Exploded View—F-100—F-350 and Bronco

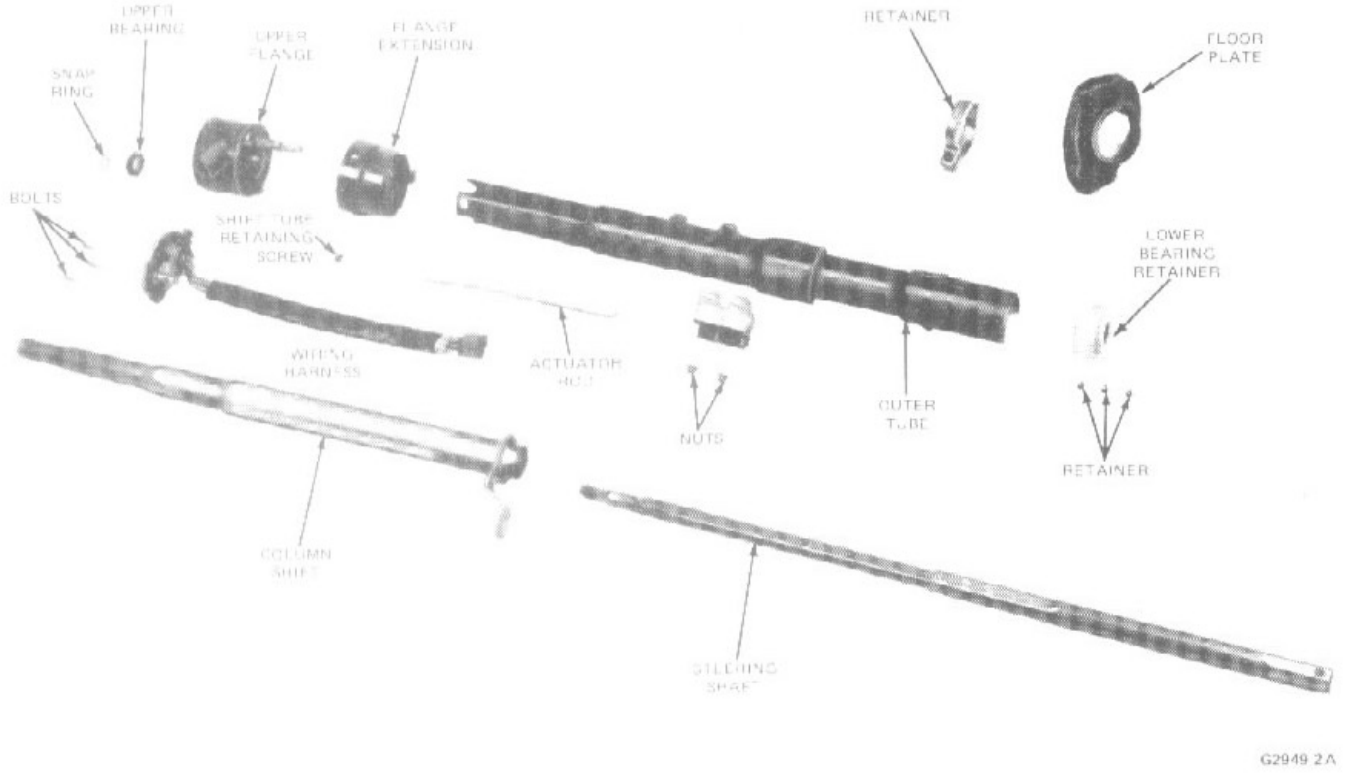

FIG. 19 Automatic Transmission Steering Column Exploded View—F-100—F-350 and Bronco

12. Remove lower bearing retainer on automatics.
13. Withdraw shift tube from top on 3 speeds or bottom on automatics of the steering column.
14. Withdraw lower shift arms and spacer from column outer tube on 3 speeds.
15. Remove lamp from flange on automatics and separate turn signal-hazard warning switch from flange.
16. Remove bearing and tire from upper flange by tapping with light hammer from opposite side of flange.
17. Disassemble the flange and locking mechanism per this section.
18. Remove the floor opening cover plate from the outer tube.

Assembly

1. Place bushing in socket retainer in outer tube on manual 3 speeds.
2. Place bushing on upper hub and wave washer on lower hub of shift socket (3 speeds).
3. Insert lower shift arms and spacer in outer tube (3 speeds).
4. Insert shift tube assembly from top (3 speeds) or bottom (manual 3 speeds, automatics) of column.
5. Install shift socket onto shift tube in outer tube or flange extension onto outer tube 1.7-2.3 N·m (15-20 in-lbs).
6. Install shift tube retaining screw in the bottom of the shift socket on automatics.
7. Place turn signal-hazard warning switch wiring harness through flange.
8. Press lamp and wire into flange on automatics.
9. Feed turn signal harness through shift socket pinching the flange casting subassembly retaining nuts toward each other, install flange.
10. Install ignition switch actuation rod, ignition switch and hand start the washer-nuts retaining the switch.
11. Adjust the ignition switch per this Part.
12. Install the steering shaft from the column bottom.
13. Install the lower bearing retainer.
14. Install the upper shaft bearing and tire per this Part.
15. Install the snap ring on the shaft above the upper bearing.
16. Install the turn signal-hazard warning switch and tighten the 3 retaining screws.
17. Install the PRND21 hood and lens on automatics.
18. Install the shift lever and pivot pin 3 speeds and automatics.
19. Install the turnsignal lever.
20. Install the steering column per this Part.

TILT COLUMN

Refer to Fig. 22.

Disassembly

1. Remove the column per this section and clamp in vise.

   NOTE: Clamping is permitted only on the upper tube. Care is to be taken not to permanently deform the tube wall. Permanent deformation may affect column performance during an accident.
2. Remove the turn signal lever. Drive out the pivot pin and remove the shift lever (automatics).
3. Remove the steering shaft lower flange (E-100—E-350 only).
4. Remove the steering shaft retaining clamp (E-100—E-350 only).
5. Remove the lower bearing retainer.
6. To remove the shift tube and/or socket, remove the shift tube retaining screw from the bottom of the shift socket and withdraw the shift tube from the bottom of the column, (automatics).
7. Remove the lock drive gear as detailed in this Part.
8. Remove the screws securing the turn signal switch (Fig. 23). Remove the wiring harness-to-steering column tube clips (if required). Remove the turn signal switch and wiring harness from the steering column.
9. Remove the cover casting screws. Lift the cover casting up and over the steering column upper shaft, and remove the casting from the column. Unhook the upper actuator from the lower actuator and remove.
10. Remove and discard the screws that attach the lower flange to the outer tube.
11. Loosen the ignition switch nut and washer assemblies and remove the ignition rod from the switch end.
12. Withdraw the tilt mechanism, steering shaft, and ignition actuation rod from the steering column upper end.
13. Remove the shift socket (automatics).
14. Remove 3 screws retaining the flange extension on manual 4 speeds or PRND21 ring (E-100—E-350 only) (automatics) and remove the extension or ring.
15. Remove the key release lever mechanism from the tilt mechanism (manual 4 speeds).
16. Disassemble the tilt mechanism subassembly per this Part.

Installation

1. Assemble the tilt mechanism per this part.
2. Attach the PRND21 ring to the tilt mechanism (E-100—E-350 only) (automatics) with 3 screws. Tighten to 1.1-2.2 N·m (10-20 in-lbs).
3. Attach the key release lever mechanism to the tilt mechanism (manual 4 speed) per this section.
4. Attach the flange extension to the tilt mechanism with 3 screws. Tighten to 1.1-2.2 N·m (10-20 in-lbs).
5. Install the shift socket (automatics).
6. Install the tilt mechanism, feeding the steering shaft down the center of the column and the ignition actuation rod through the shift socket/flange extension along the top of the column outer tube because the steering shaft on the F-100—F-350 and Bronco is a telescoping type, care should be taken not to change the length of the shaft.
7. Install the 3 flange retainer assemblies using new hex screws. Tighten to 5.6-7.7 N·m (50-68 in-lbs). Always use new Allen head screws to be sure the epoxy cement bonds properly.

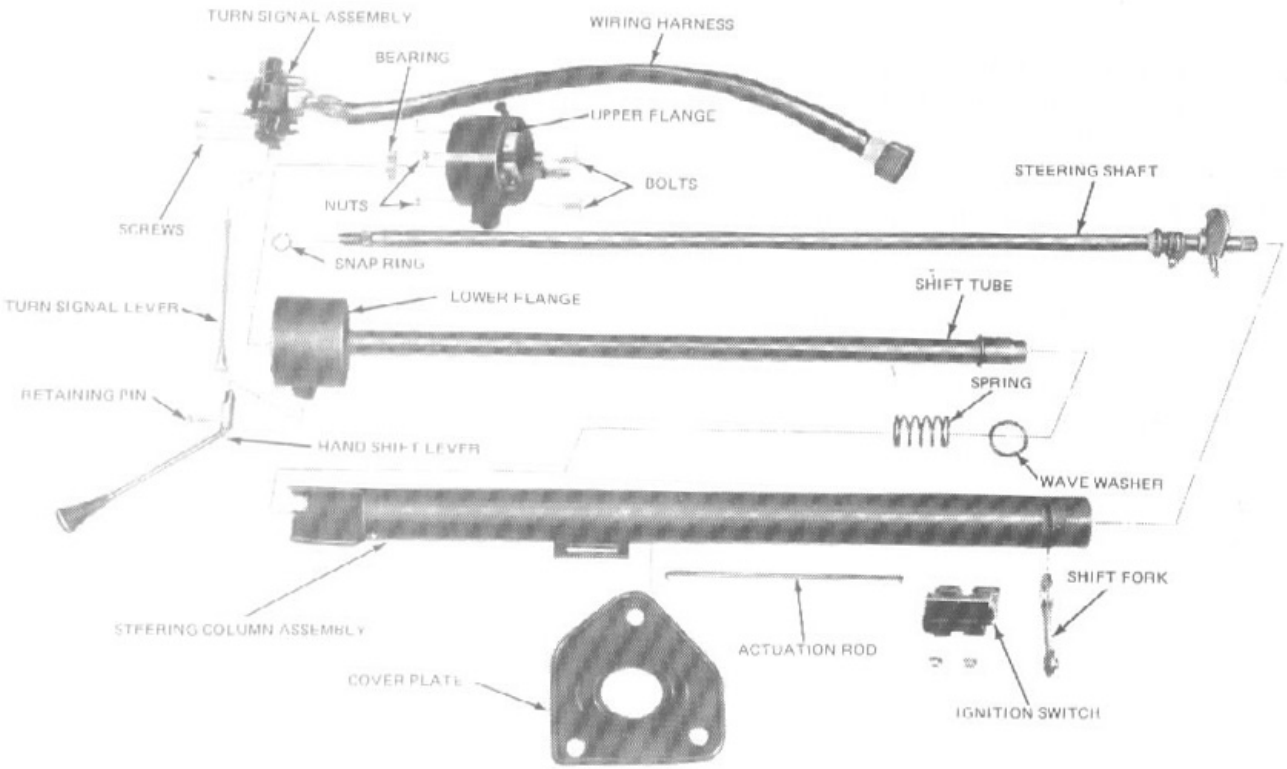

G2534-2B

FIG. 20 Steering Column With Automatic Transmission—E-100—E-350

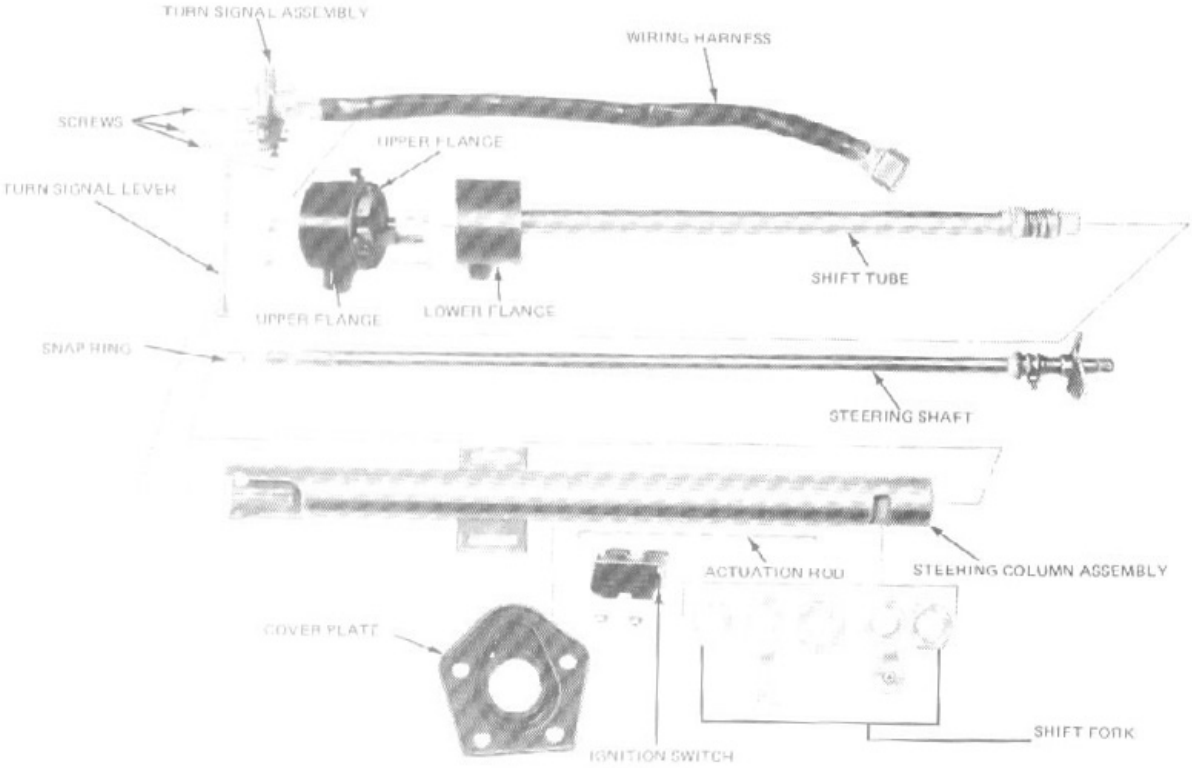

G2535-2B

FIG. 21 Steering Column With Manual Transmission—E-100—E-350

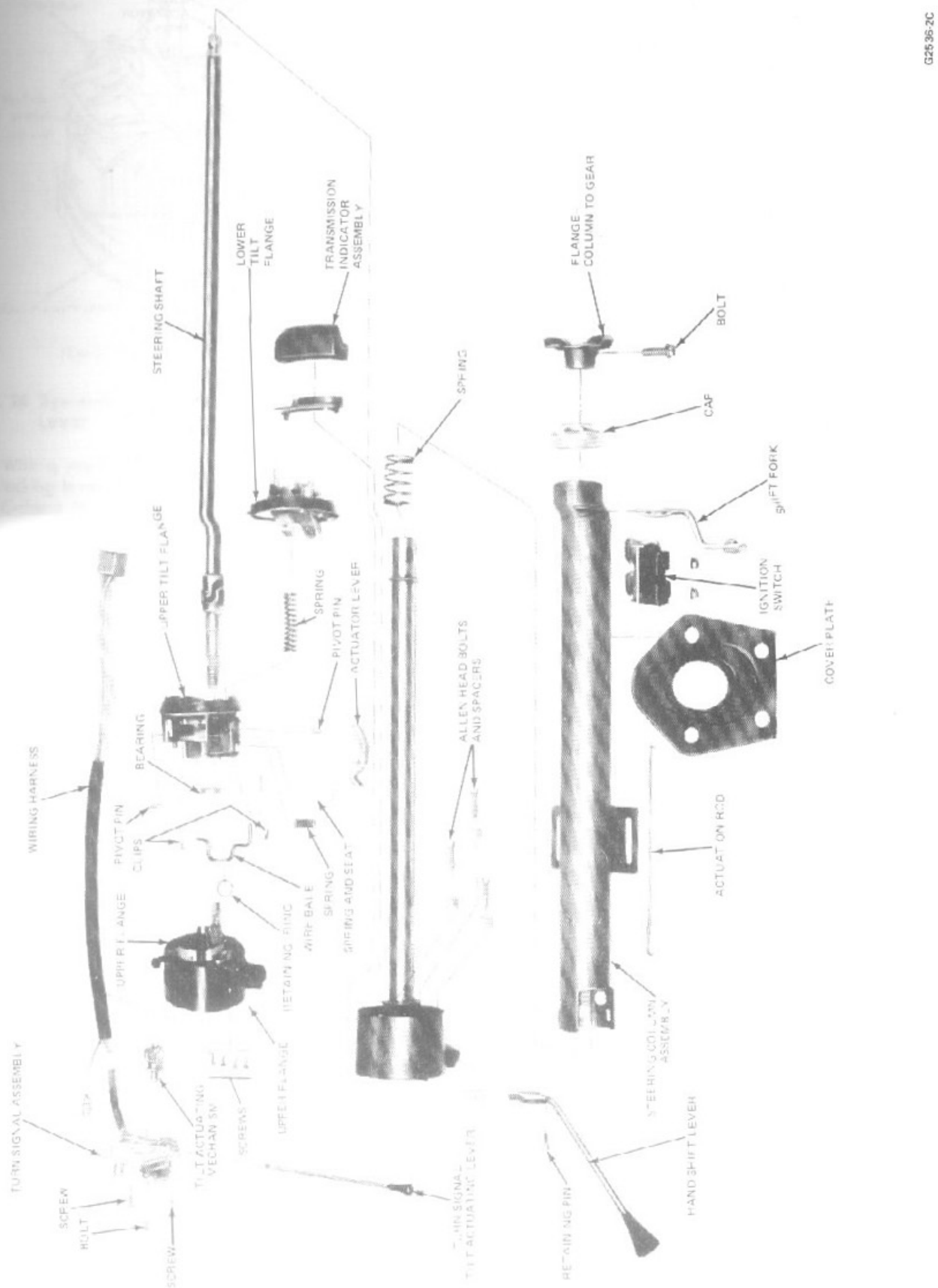

FIG. 22 Tilt Column—E-100—E-350

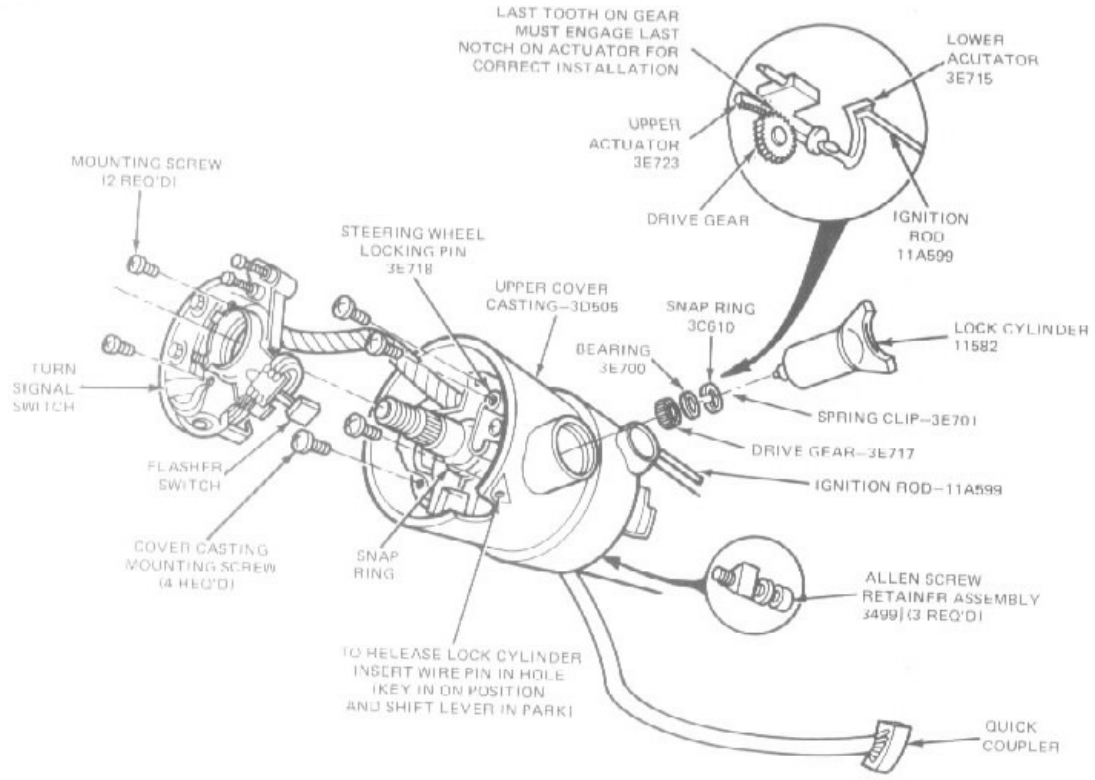

FIG. 23 Tilt Column Mechanism

Install the lower bearing retainer per this Part.

8. Attach the ignition switch loosely to the outer tube.
9. Connect the upper and lower actuators. Install the cover on the column. Torque the 3 screws to 4.5-5.6 N·m (40-50 in-lbs).
10. Install the turn signal switch and wiring harness in the steering column. Attach the wiring harness-to-steering column tube clips (if required). Install the two screws that attach the turn signal switch to the flange casting and the one screw that attaches the warning buzzer terminal. Torque the screws to 2.3-3.4 N·M (20-30 lb-in) for the turn signal switch.
11. Install the turn signal lever.
12. Install the lock drive gear.
13. Install the lock cylinder with the key in the "ON" position. Install the retaining pin flush with the cylinder.
14. Adjust the ignition switch as explained in Group Part.
15. Install the shift lever and pivot pin (automatics).
16. Install the turn signal lever.
17. Install the steering column per this Part.

NON-TILTING STEERING COLUMN FLANGE AND LOCKING MECHANISM SUBASSEMBLY

F-100—F-350, E-100—E-350, and Bronco

Assembly

1. Install lock actuator insert in rear of flange and tighten screw. Tighten to 1.7-2.8 N·m (15-25 in-lbs).
2. Insert lock actuator assembly through opening in front of flange until it bottoms against insert.
3. Install gear through lock cylinder opening such that the last gear tooth aligns, with the last tooth on the actuator assembly when the actuator is fully rearward.
4. Install the gear thrust bearing.
5. Install the gear thrust bearing snap ring.
6. With the lock cylinder in the "RUN" position and the retaining pin depressed. Insert the lock cylinder into the flange.
7. Attach PRND21 insert to front of flange on automatic transmissions.
8. Position spring on lock release lever assembly and position lever assembly through hole in front of flange on manual transmissions. Torque spring until lever assembly is allowed to drop into place.
9. Install snap ring on lever assembly (manuals).
10. Install flange retaining bolts through holes in flange and hand start nuts 1 to 2 threads on rear side.

Disassembly

Reverse the assembly operations.

TILT MECHANISM UPPER SHAFT, BEARINGS, AND FLANGE CASTINGS

Service of this mechanism requires the steering column to be removed from the vehicle and disassembled on the bench to remove the tilt mechanism.

Disassembly

1. Remove the spring clips holding the wire bale which acts as a release lever for the locking lever. Remove the wire bale (Fig. 24).

STEERING COLUMN LOWER BEARING RETAINER SUBASSEMBLY

F-100—F-350 and Bronco

Disassembly

1. Remove shaft retainer.
2. Remove retaining ring.
3. Press out bearing and tire from opposite side.

Assembly

1. Place tire on bearing.
2. Insert bearing and tire into retainer such that the offset inner race of the bearing is "Up-Column".
3. Install the retaining ring.
4. Install the shaft retainer through the bearing such that the solid ring of the shaft retainer will be "Up-Column".

MANUAL 3 SPEED SHIFT TUBE SUBASSEMBLY

F-100—F-250

Disassembly

1. Holding the shift tube above the spring, push-up and rotate lower (intermediate and high) shift arm until loading slot in arm aligns with lower key.
2. Remove the lower arm and lower spacer.
3. Rotate the upper (reverse and low) shift arm until the loading slot in arm aligns with the lower key.
4. Remove the upper arm and upper spacer.
5. If the grommets in shift arms are to be removed they must be renewed.

Assembly

1. Install grommets in shift tube with small end facing up column.
2. Stack upper spacer, upper arm, lower spacer, and lower arm concentrically in vehicle order such that the loading slots align.
3. Pressing this entire stack through the common loading slot on to the shift tube, rotate the stack components individually, lower arm first, then lower spacer, upper arm, and upper spacer until the arms are aligned with their key ways on the shift key and the spacers allow the shift key to pass freely through the operating slots.

STEERING SHAFT AND ANTI-RATTLE CLIPS

Fixed Column F-100—F-350 and Bronco

Disassembly

1. Remove the steering column assembly as detailed in this Part.
2. Secure the steering column assembly in a vise.
3. Remove the upper shaft bearing as detailed in this Part.
4. Working from the bottom of the column, remove the steering shaft.
5. Draw a mark on the lower shaft where the upper and lower steering shaft sections form a joint line.
6. Separate the upper and lower steering shaft sections.
7. Remove and discard the two steel anti-rattle clips.

Assembly

1. Install new anti-rattle clips. Be sure both are installed in the same direction.
2. Liberally lubricate the lower six inches of the end of the upper shaft.
3. Secure the lower shaft in a vise. Install the upper shaft to the mark on the lower shaft.
4. Working from the bottom of the column, install the shaft into the column from the bottom.
5. Install the upper shaft bearing.
6. Install the steering column assembly as detailed in this Part.

Tilt Column

Disassembly

1. Remove the steering column assembly as detailed in this Part.
2. Secure the steering column assembly in a vise.
3. It is not necessary to remove the turn indicator switch and wiring harness from the steering column.
4. Working from the top of the column, remove the steering shaft and tilt mechanism.
5. Draw a mark on the lower column where the upper and lower steering shafts form a joint line.
6. Separate the upper and lower steering shafts.
7. Remove and discard the two steel anti-rattle clips.

Assembly

1. Install new anti-rattle clips. Be sure both are installed in the same direction.
2. Lubricate the lower end of the upper shaft.
3. Secure the lower shaft in a vise and install the upper shaft to the mark on the lower shaft.
4. Install the steering shaft assembly and the tilt mechanism.
5. Install the steering column assembly as detailed in this Part.

SPECIFICATIONS

SPECIAL SERVICE TOOLS

Number	Description
T67L-3600-A	Steering Wheel Remover
T67P-3D739-B	Pivot Pin Remover
T67P-3D739-A	Pivot Pin Remover Kit
T67P-3D739-C	Pivot Pin Remover Handle

CG1716-1C