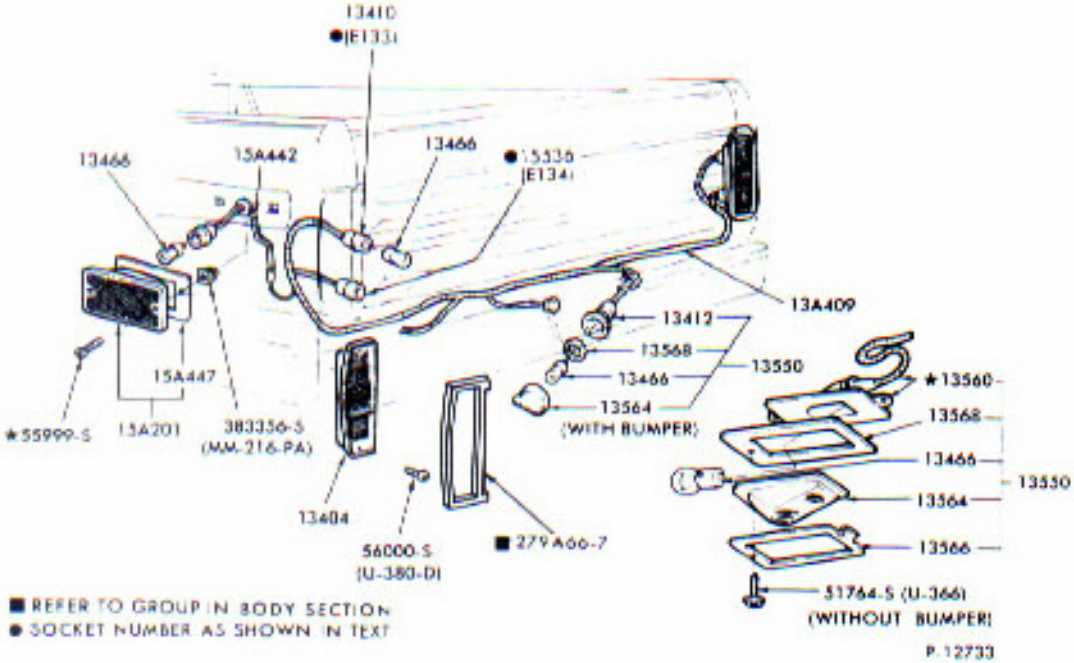

REAR LAMP, LICENSE PLATE LAMP and RELATED PARTS
1978/ BRONCO