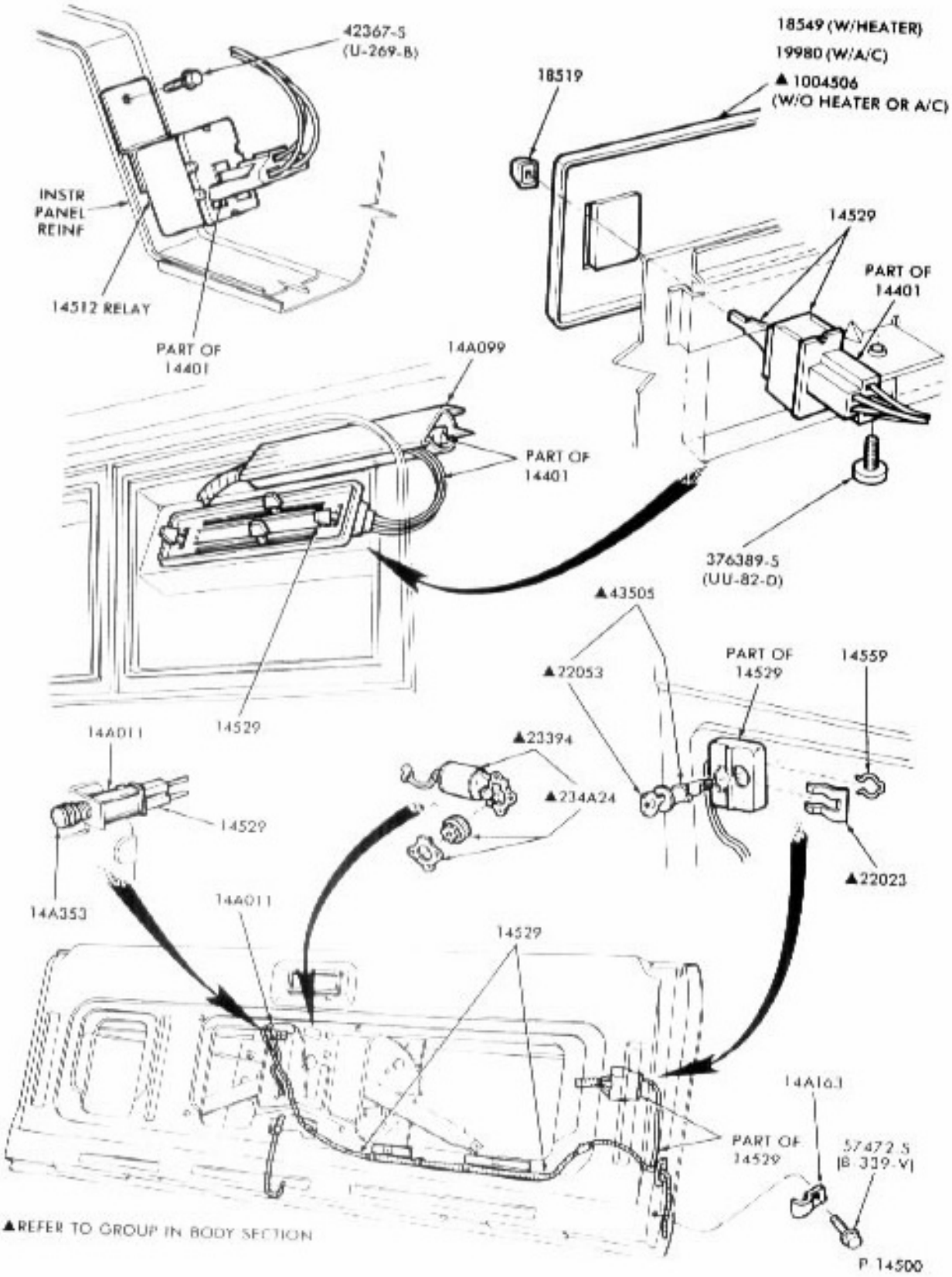

▲REFER TO GROUP IN BODY SECTION

POWER TAILGATE WINDOW CONTROLS and RELATED PARTS
1978/ BRONCO