1973/79 FORD CARS

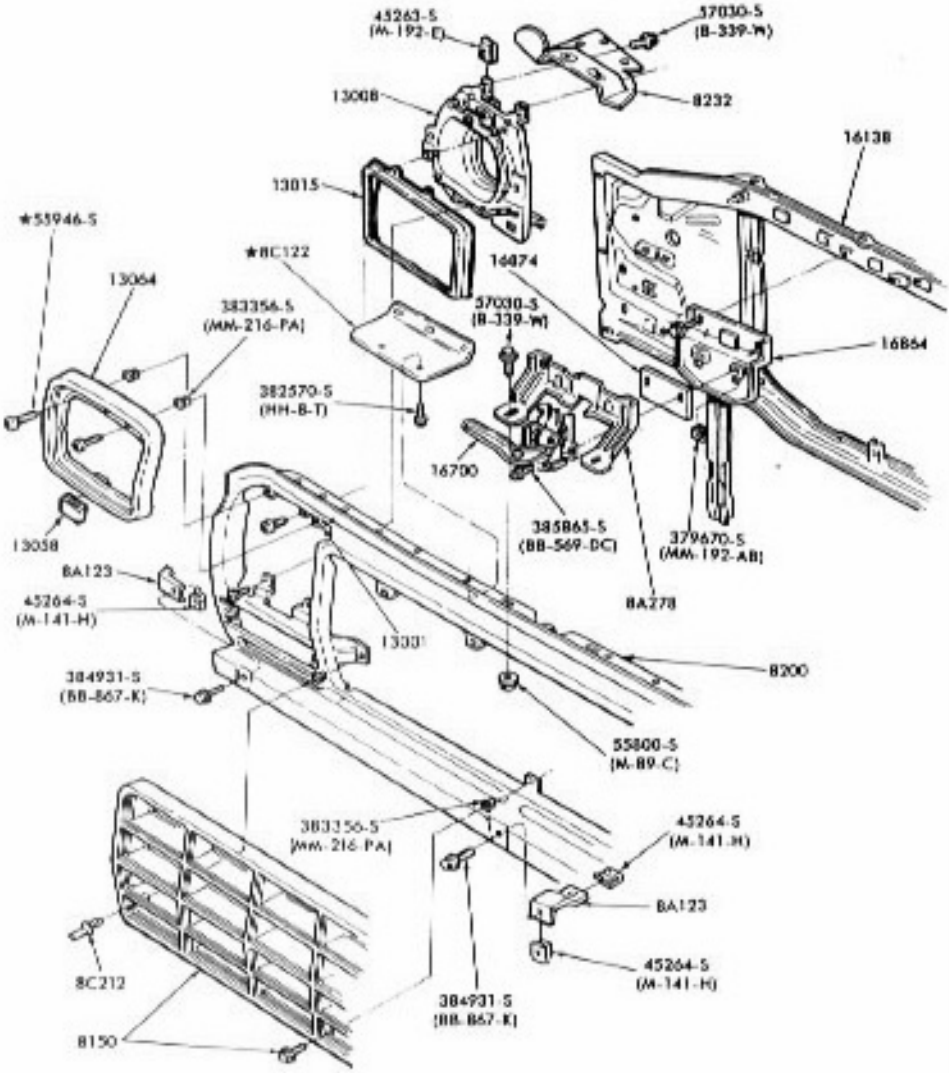

P-14029

RADIATOR GRILLE and RELATED PARTS
1978/ BRONCO

COPYRIGHT 1984 — FORD MOTOR — DEARBORN, MICHIGAN
COMPANY