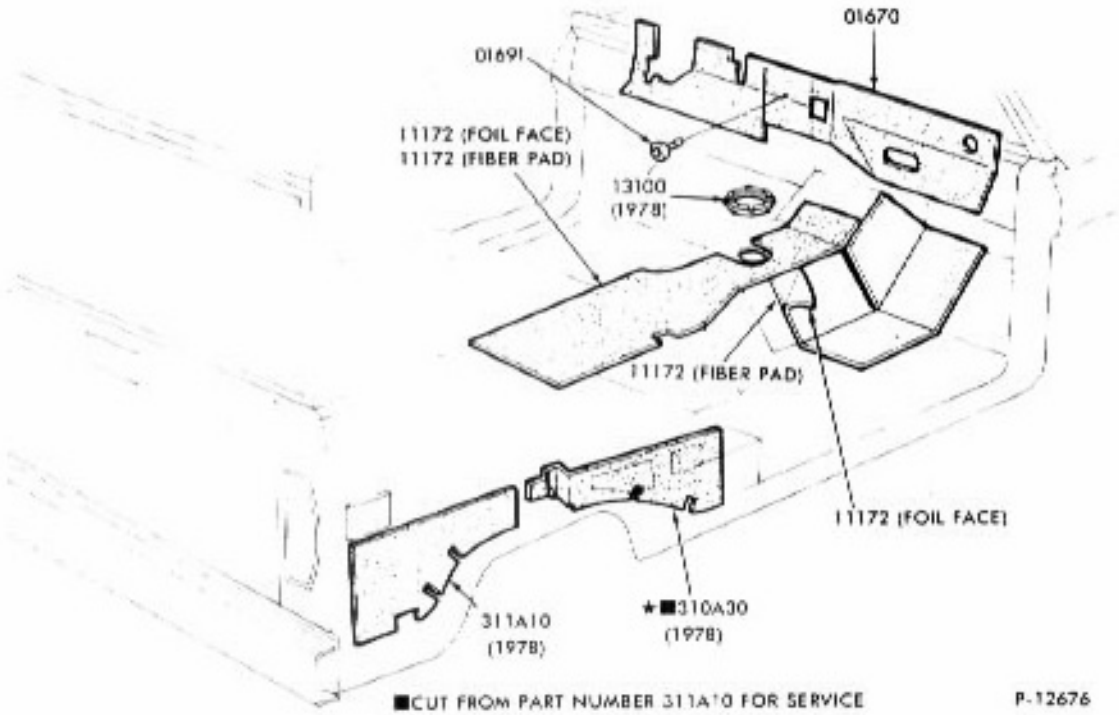

■CUT FROM PART NUMBER 311A10 FOR SERVICE

P-12676

FLOOR INSULATORS
1975/ BRONCO

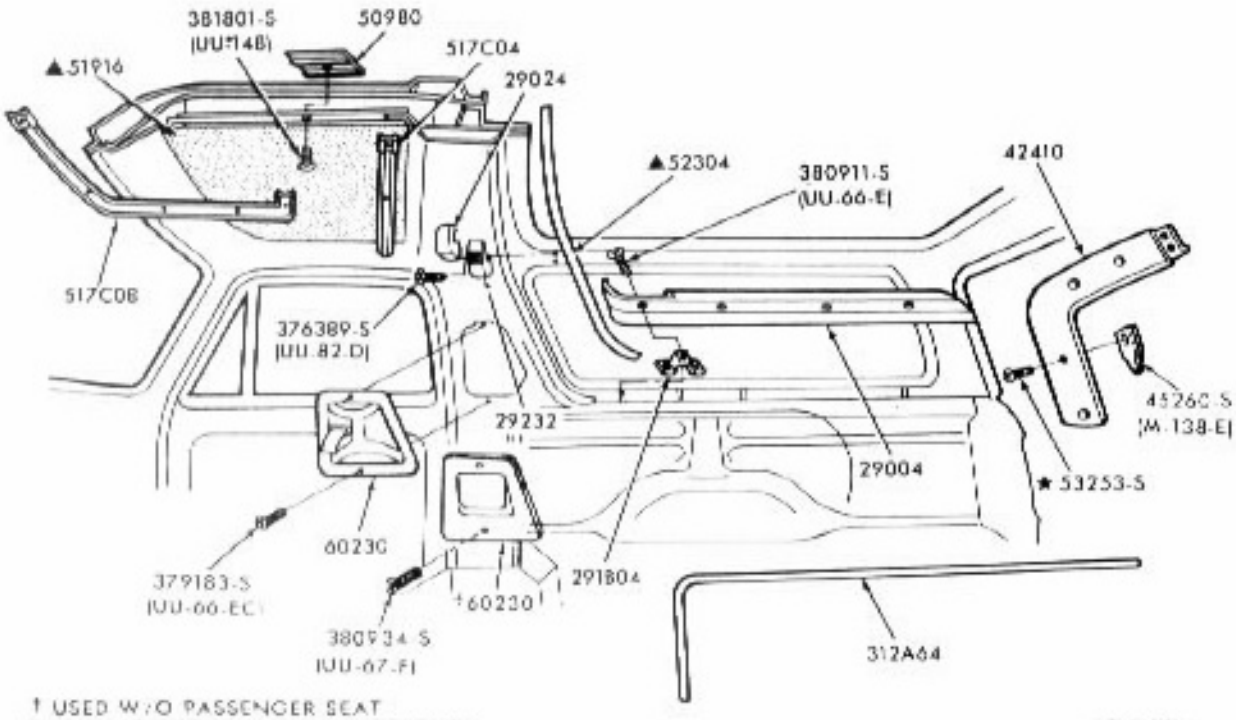

† USED W/O PASSENGER SEAT
▲ REFER TO GROUP IN SOFT TRIM SECTION

P-14151

ROOF TRIM PANELS and GARNISH MOULDINGS
1978/ BRONCO

COPYRIGHT 1984 — FORD MOTOR COMPANY — DEARBORN, MICHIGAN