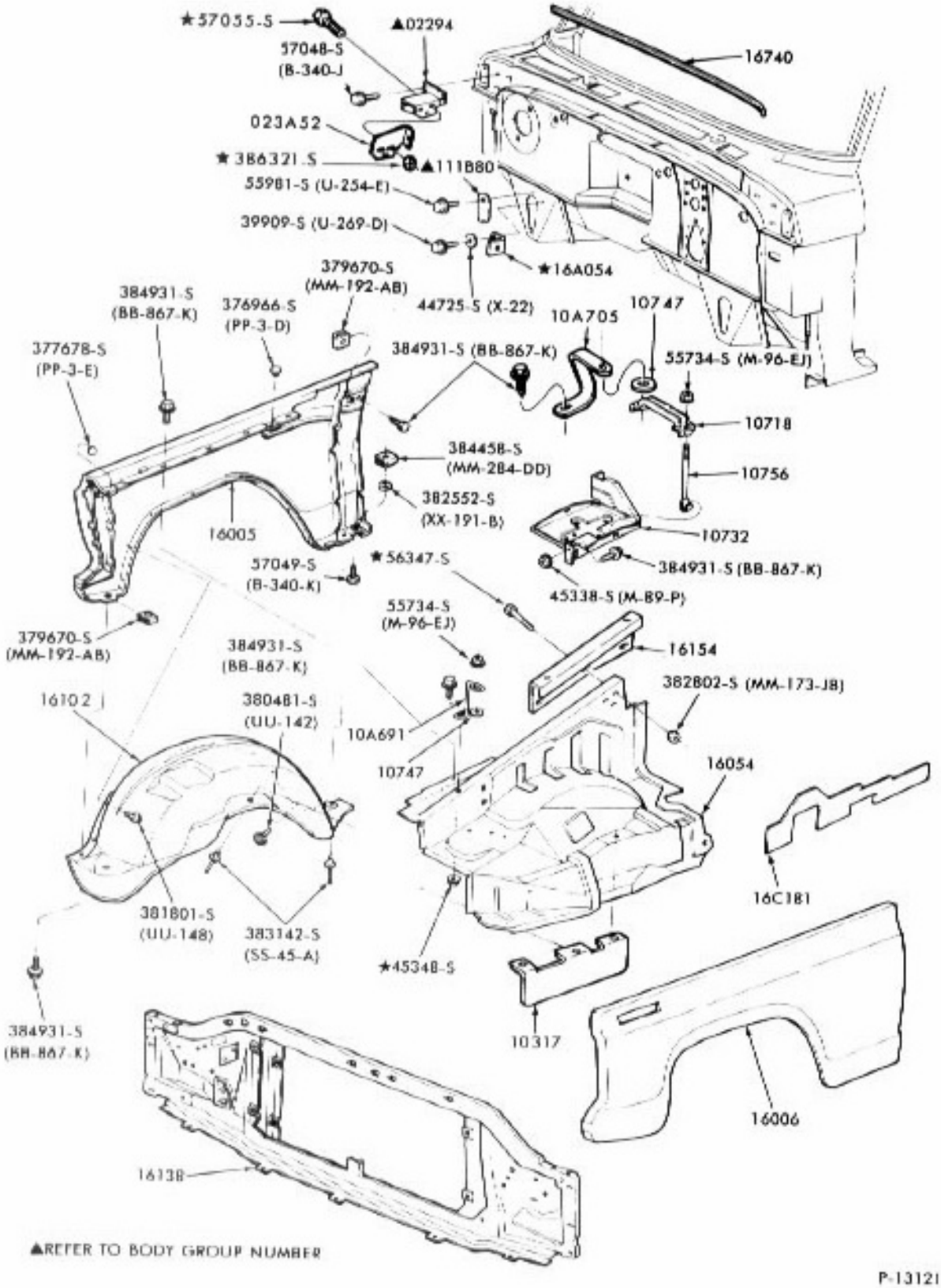

FENDERS, APRONS and RELATED PARTS
1978/ BRONCO

COPYRIGHT 1984 — FORD MOTOR COMPANY — DEARBORN, MICHIGAN