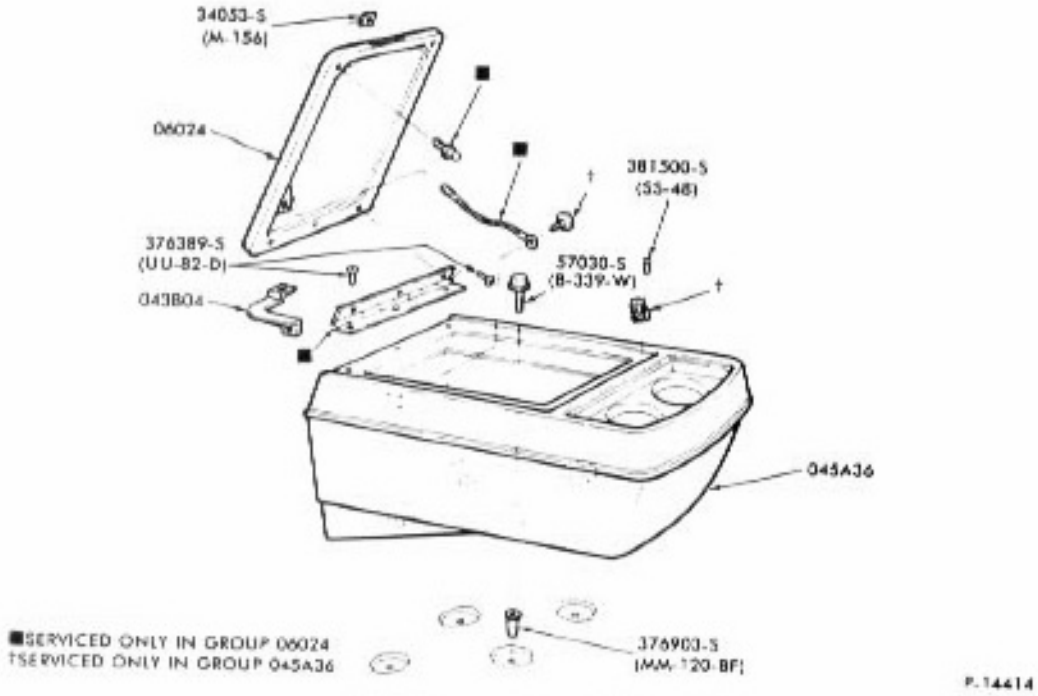

CONSOLE and RELATED PARTS
1978/ BRONCO

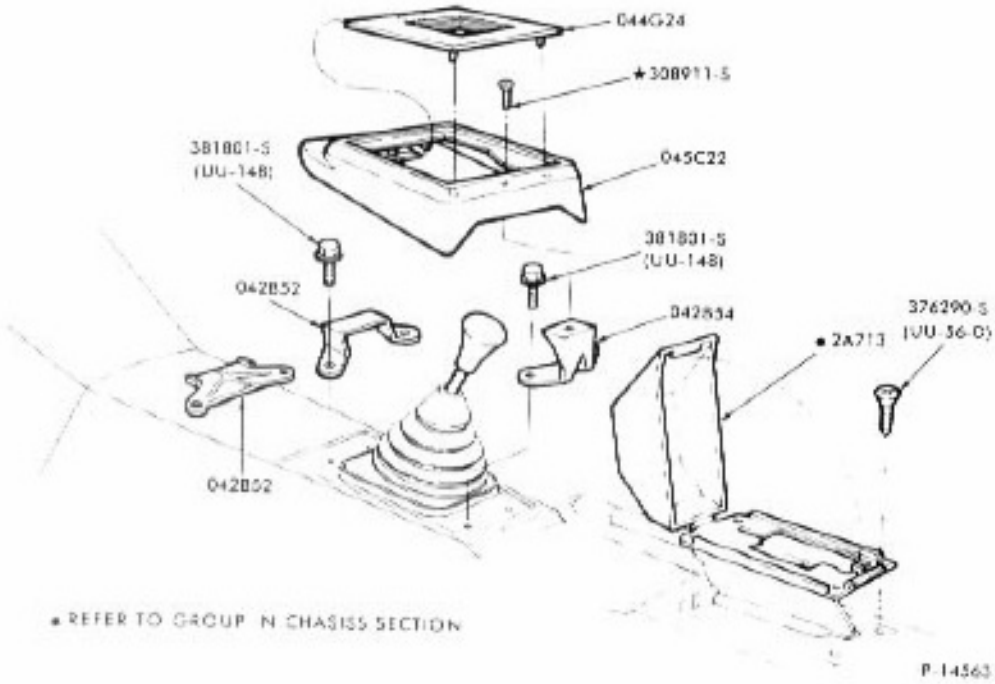

CONSOLETTE and RELATED PARTS
1979 FAIRMONT and MUSTANG

COPYRIGHT ©1984 — FORD MOTOR COMPANY — DEARBORN, MICHIGAN