1973/79 FORD CARS

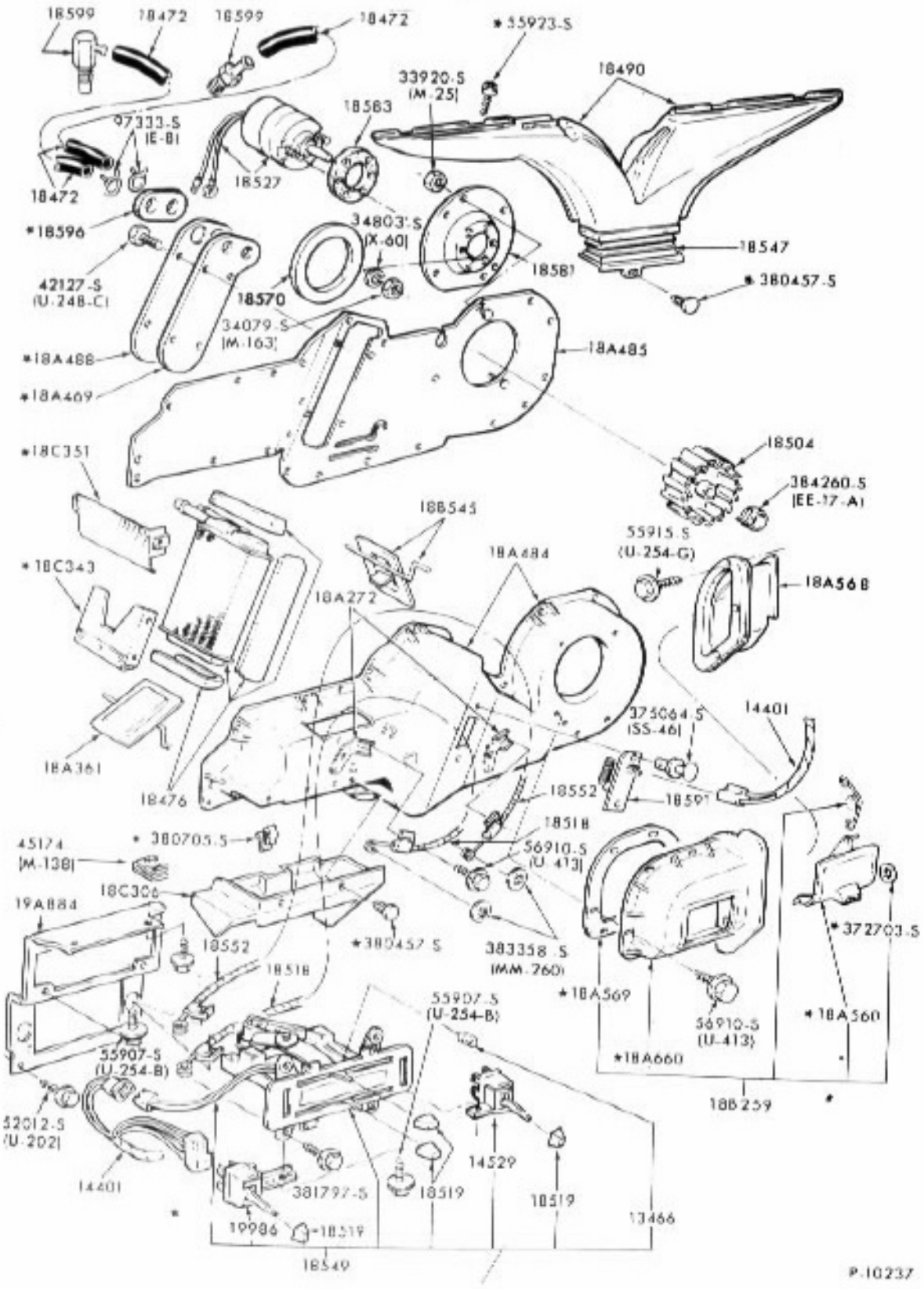

HEATER, CONTROLS and RELATED PARTS
1978/ BRONCO