1973/79 FORD CARS

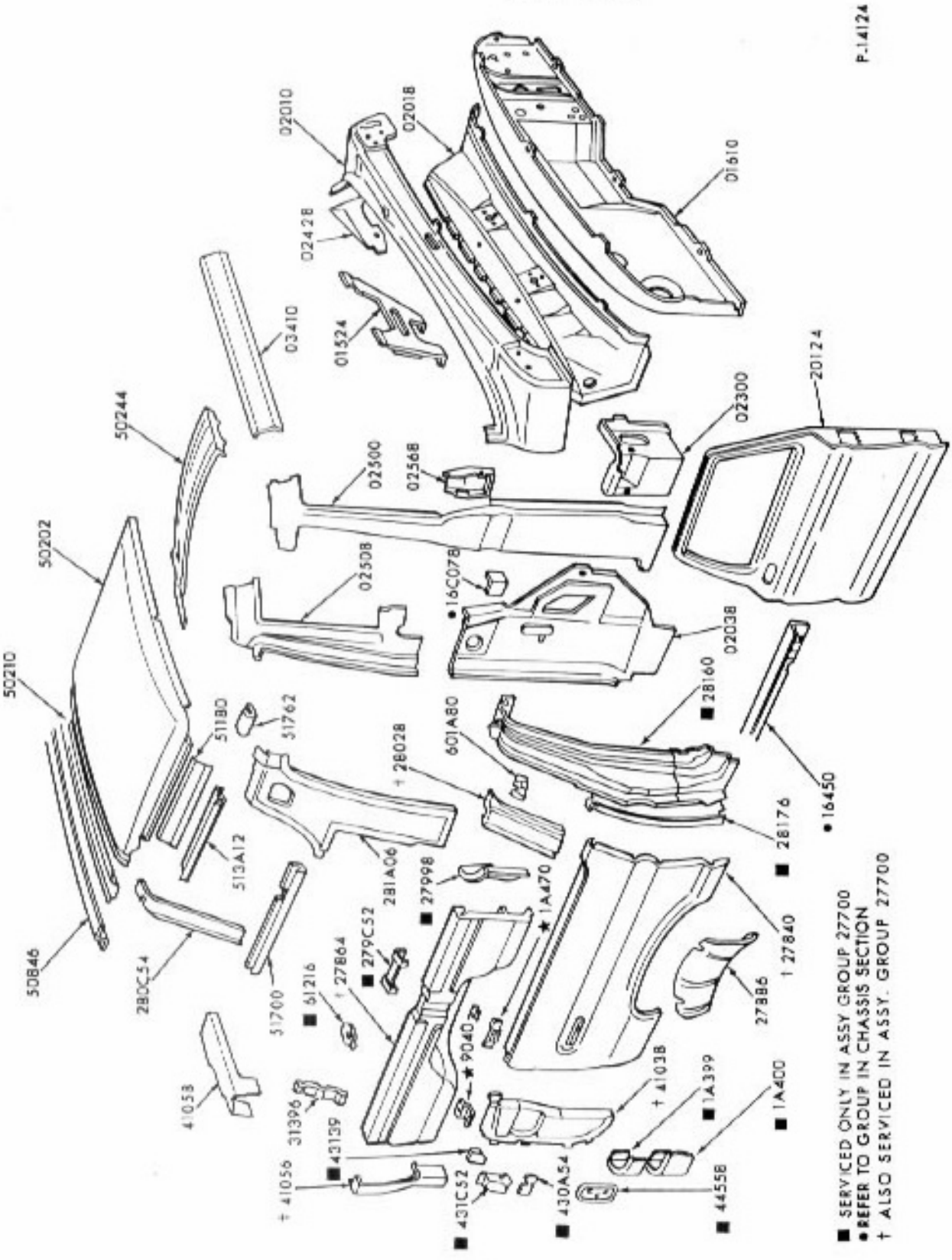

UPPER BODY
1978/ BRONCO