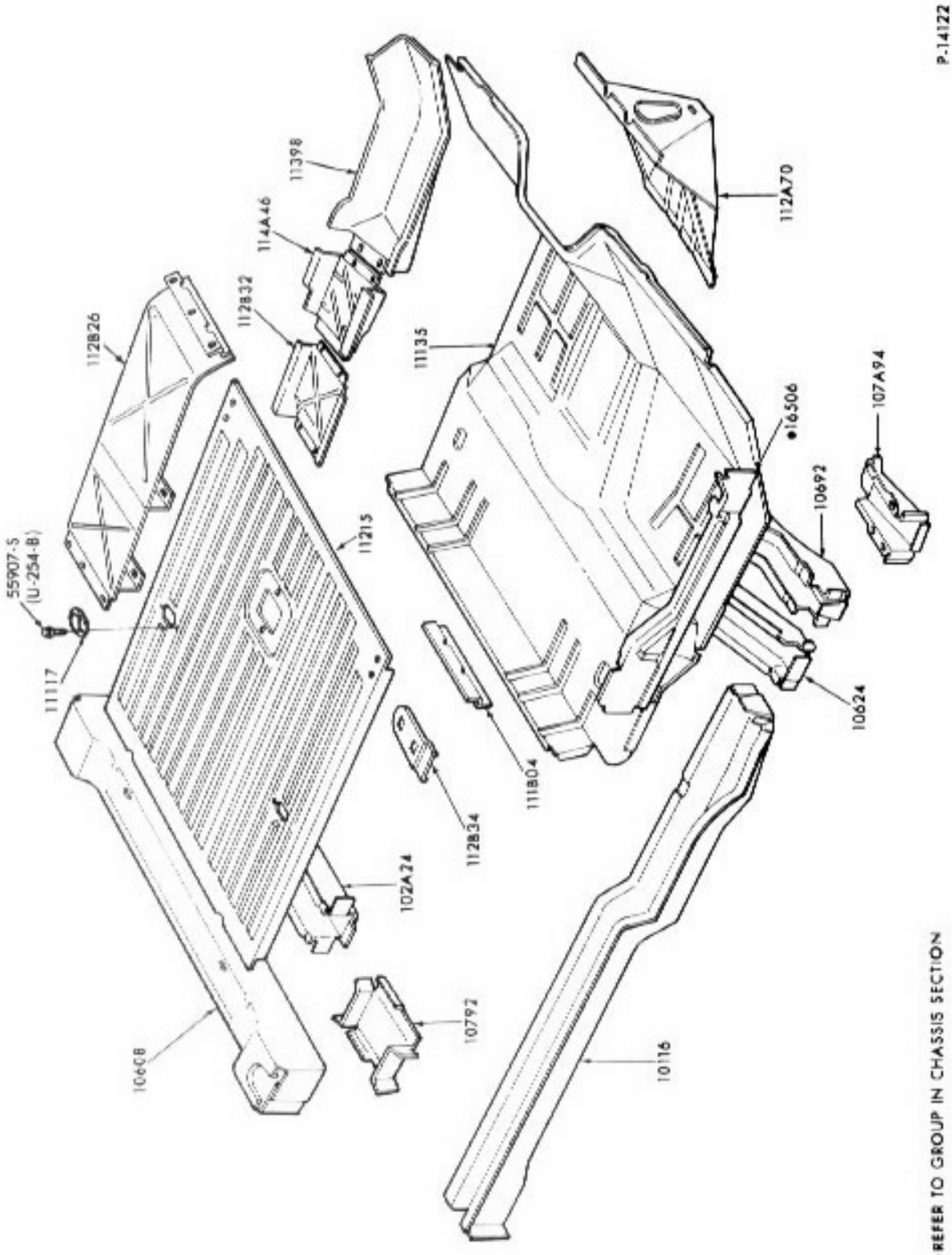

LOWER BODY
1978/ BRONCO

COPYRIGHT ©1984 — FORD MOTOR COMPANY — DEARBORN, MICHIGAN