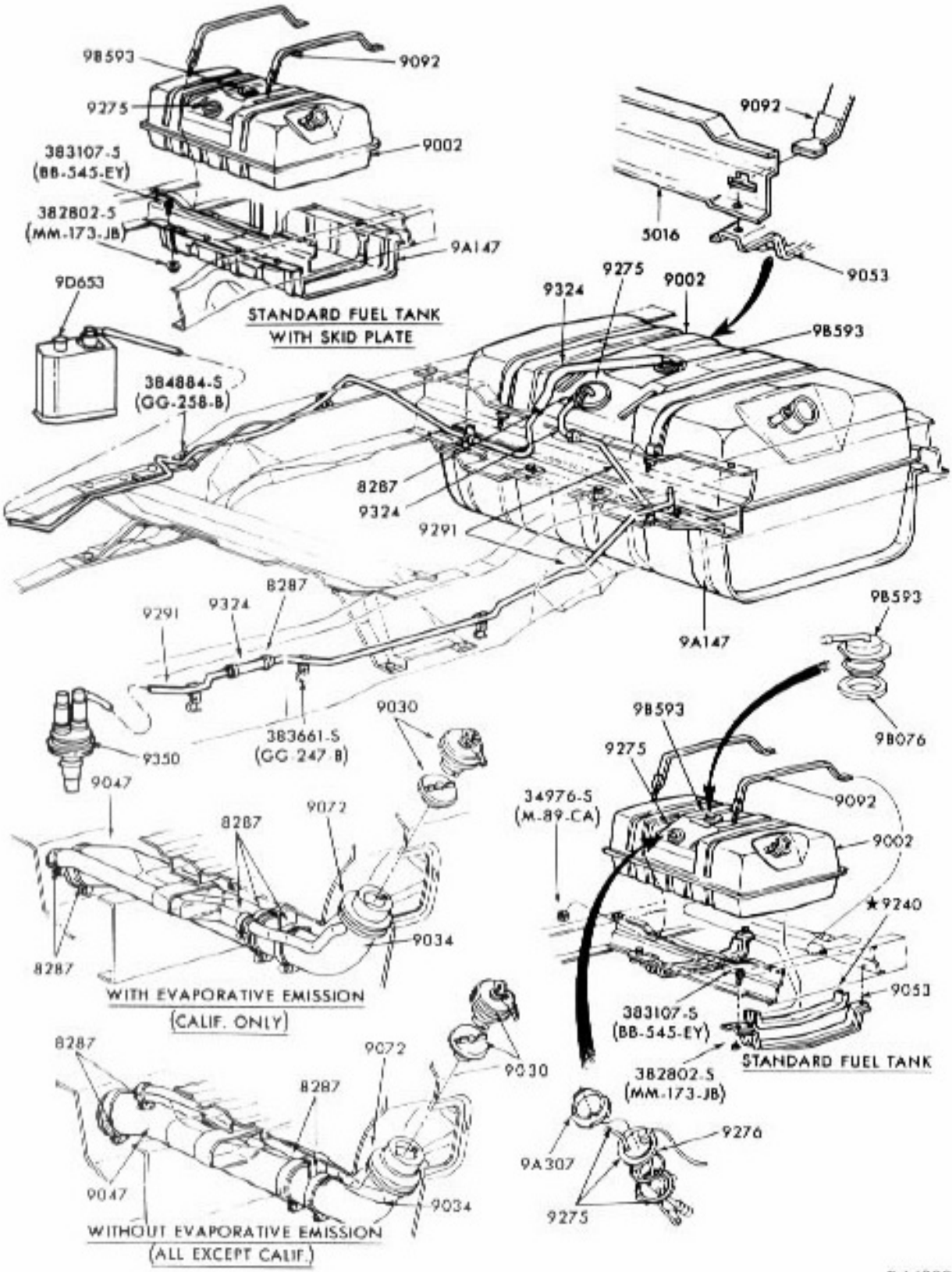

FUEL SYSTEM and RELATED PARTS
1978/ BRONCO--8 CYL. 351,400

COPYRIGHT ©1984 — FORD MOTOR COMPANY — DEARBORN, MICHIGAN