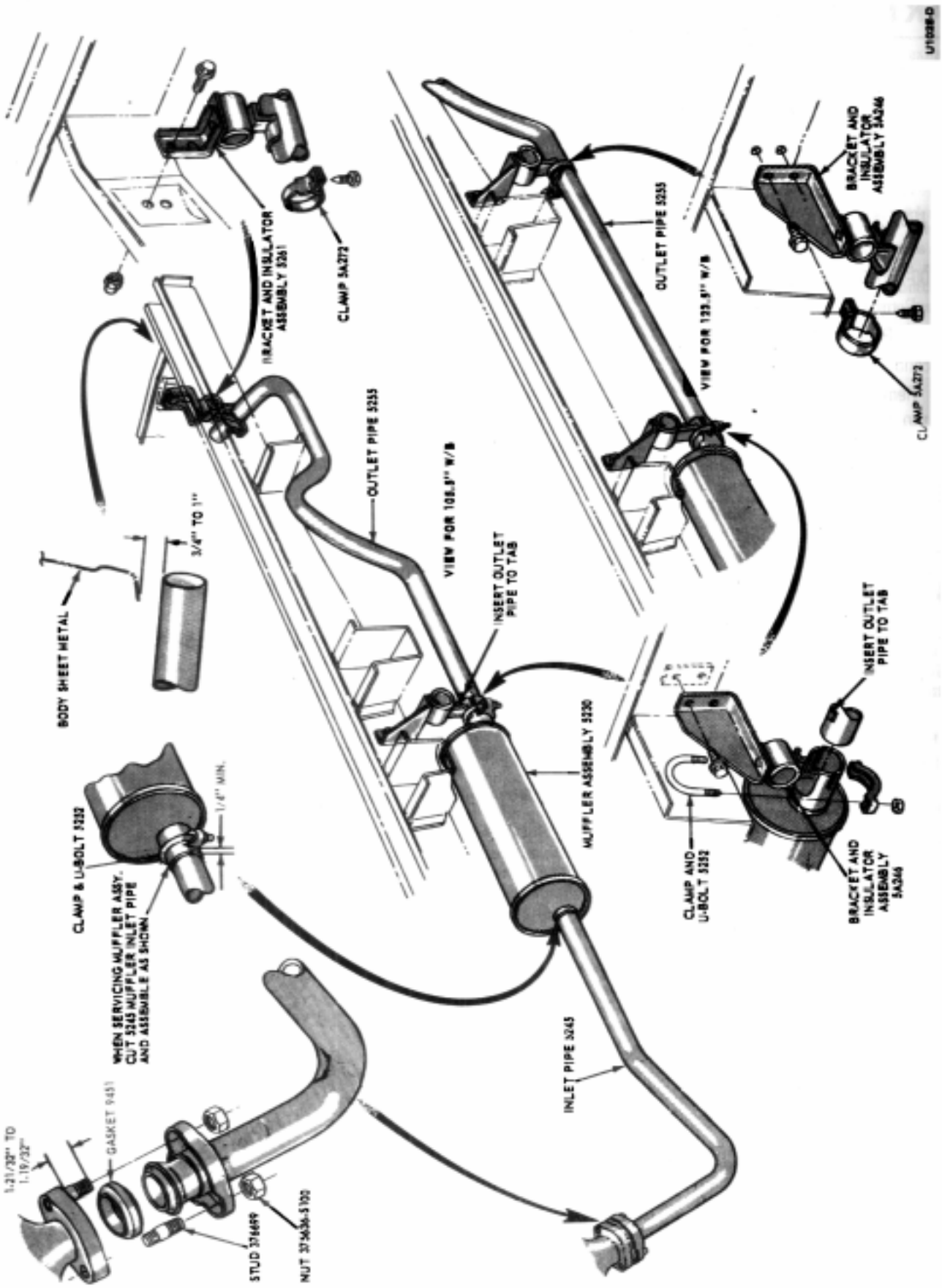
U1098-D
BRACKET AND INSULATOR ASSEMBLY 5261
CLAMP 5A272
OUTLET PIPE 5255
VIEW FOR 108.9" W/B
VIEW FOR 123.9" W/B
BRACKET AND INSULATOR ASSEMBLY 5A246
CLAMP 5A272
3/4" TO 1"
BODY SHEET METAL
INSERT OUTLET PIPE TO TAB
MUFFLER ASSEMBLY 5230
CLAMP & U-BOLT 5232
1/4" MIN.
WHEN SERVICING MUFFLER ASSY. CUT 5245 MUFFLER INLET PIPE AND ASSEMBLE AS SHOWN
CLAMP AND U-BOLT 5232
BRACKET AND INSULATOR ASSEMBLY 5A246
INLET PIPE 5245
1.21/32" TO 1.19/32"
GASKET 9451
STUD 376699
NUT 375636-S100

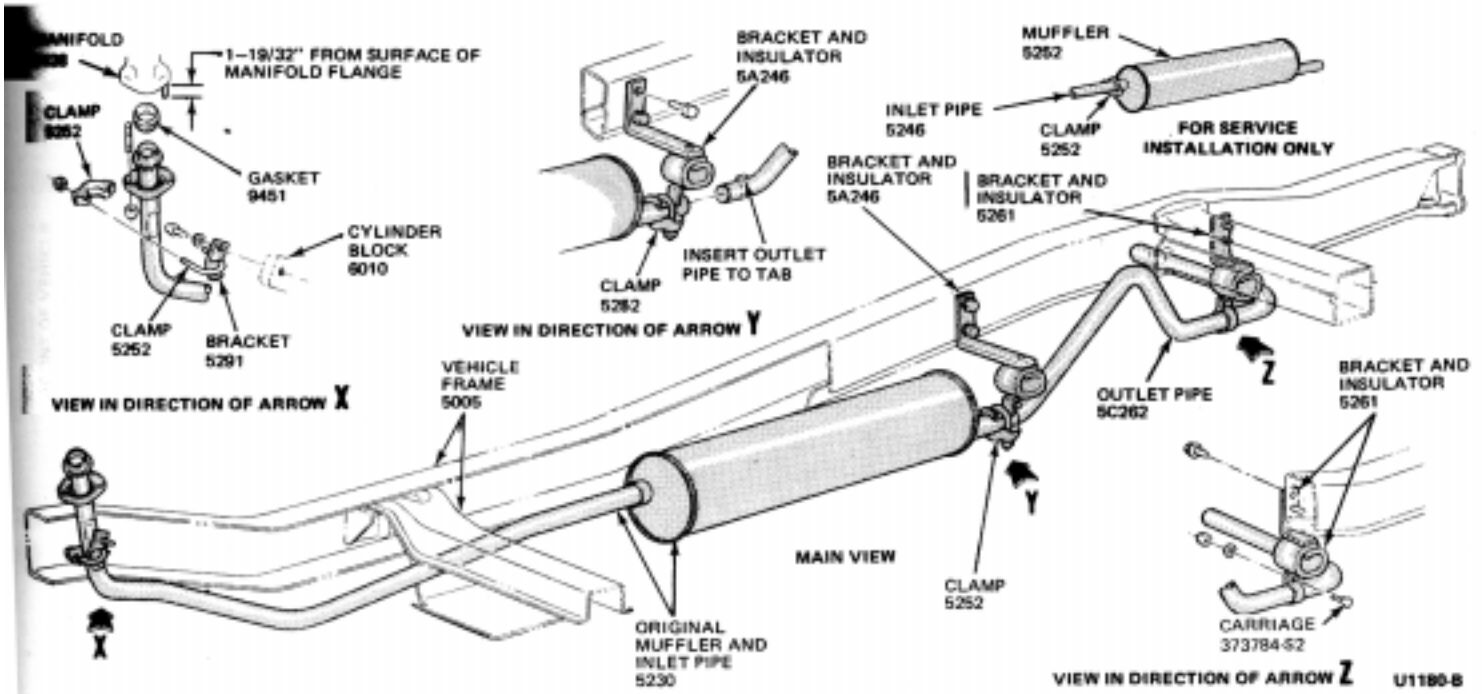

FIG. 2 Bronco Six-Cylinder Exhaust System

F-100, 250, 350 and P-Series

The typical six cylinder single exhaust systems are shown in Figs. 3, 4 and 5.

Removal

Loosen the outlet pipe clamps; then slide the outlet pipe (except cab models) toward the rear.

Loosen the inlet pipe and muffler retaining clamp.

Temporarily support the muffler and inlet pipe in position with soft wire.

Remove the inlet pipe to manifold attaching nuts; then remove the wire and pull the inlet pipe and muffler assembly away from the manifold. Remove the gasket and inlet pipe.

Separate the inlet pipe from the muffler if the muffler is still serviceable. On F-Series trucks, the production muffler and inlet pipe is a one-piece assembly. In service, however, both parts are replaced individually. If the inlet pipe being replaced still has the welded-on muffler, replace both components.

5. Clean the exhaust manifold flange. Replace any damaged or worn exhaust system parts.

Installation

1. Position the new gasket and inlet pipe to the exhaust manifold. Install the attaching nuts and, alternately and evenly, torque them to specifications.
2. Position the front support bracket and clamp between the inlet pipe and frame side rail. Do not tighten the attaching nuts.
3. Install the inlet pipe to support bracket clamp (if so equipped) and loosely install the attaching nut. On other models support the inlet pipe with soft wire.
4. Position the muffler and oulet pipe in place, loosely installing the clamp(s) attaching nuts.
5. Align the exhaust system and, torque the remaining attaching nuts to the specifications shown in Part 26-01.
6. Check the exhaust system for leaks.

500-750 Series Trucks

Exhaust systems are shown in Figs. 6, 7, 8 and 9.

Removal

On some trucks the production muffler and inlet pipe (or inlet pipe extension) is a one-piece assembly. In service, however, the parts are replaced individually. If the inlet pipe being replaced still has the welded-on muffler, replace both components.

1. Remove or slide forward the inlet pipe (or extension pipe) to muffler clamp (if so equipped).

PART 26-21 V-8 Single Exhaust Systems

Applies to Bronco, Econoline, F100, 250 and 300 and 600 thru 900

COMPONENT INDEX	Page	COMPONENT INDEX	Page
INLET PIPE		OUTLET PIPE	
Removal and Installation	21-01	Removal and Installation	21-01
MUFFLER		EXHAUST SYSTEM	
Removal and Installation	21-01	F-100, 250-, 350	21-01
		600-400 Series Trucks	21-02

REMOVAL AND INSTALLATION

Brackets, clamps and insulators should be replaced if they are damaged or badly corroded. Do not attempt to repair these parts.

INLET PIPE—EIGHT-CYLINDER BRONCO MODELS

Removal

If the inlet pipe is being replaced for the first time and is still welded to the muffler proceed as follows:

1. Remove the attaching nuts securing the inlet pipe to the exhaust manifold.
2. Loosen the outlet pipe retaining clamp at the rear support bracket (Fig. 1).
3. Temporarily support the outlet pipe with soft wire.
4. Remove the clamp securing the muffler to the outlet pipe and separate the outlet pipe from the muffler.
5. Remove the attaching nuts securing the inlet pipe and crossover pipe to the exhaust manifolds.
6. Remove the muffler and inlet pipe assembly from the vehicle.
7. Discard the inlet pipe and crossover pipe to manifold gaskets.

Installation

If the inlet pipe being replaced was welded to the muffler, first install a replacement muffler as described under Muffler Installation.

1. Clean the gasket surfaces on the exhaust manifolds and the inlet pipe flanges.
2. Position the new gaskets on the inlet pipe flanges.
3. Position the inlet pipe to the exhaust manifolds and loosely install the attaching nuts.
4. Slip the front end of the muffler into place over the inlet pipe and install but, do not tighten the clamp.
5. Slip the outlet pipe into place on the muffler and install the clamp.
6. Align the exhaust system then, tighten all attaching nuts to the specifications shown in Part 26-01.
7. Start the engine and check the exhaust system for leaks.
8. Lower the vehicle.

INLET PIPE—EIGHT-CYLINDER ECONOLINE MODELS

Removal

1. Raise the vehicle.
2. Loosen the clamps securing the muffler and outlet pipe to the support brackets (Fig. 2).
3. Remove the clamp securing the inlet pipe to the muffler.
4. Separate the inlet pipe from the muffler and slide the outlet pipe and muffler rearward.
5. Disconnect and remove the inlet pipe from the exhaust manifolds.

Installation

1. Clean the inlet pipe flanges on the exhaust manifold.
2. Place new gaskets on the inlet pipe flanges. Position the inlet pipe in the muffler and on the exhaust manifolds.
3. Loosely install the exhaust manifold to inlet pipe attaching nuts.
4. Align the exhaust system and torque all attaching nuts to the specifications in Part 26-01.
5. Start the engine and check the exhaust system for leaks.
6. Lower the vehicle.

MUFFLER—BRONCO AND ECONOLINE

Removal

1. Raise the vehicle.
2. Loosen the retaining clamp(s) securing the outlet pipe to the rear support bracket(s) (Figs. 1 or 2).
3. Remove the the retaining clamp securing the outlet pipe to the muffler.
4. Separate and slide the outlet pipe rearward from the muffler.
5. Remove the clamp securing the inlet pipe to the muffler.
6. Separate the inlet pipe from the muffler and remove the muffler from the vehicle.

Installation

1. Position the muffler to the inlet pipe and loosely install the retaining clamp.
2. Position the muffler to the outlet pipe and loosely install the retaining clamp.
3. Align the exhaust system and torque the clamp attaching nuts to the specifications shown in Part 25-01.
4. Start the engine and check the system for leaks.
5. Lower the vehicle.

OUTLET PIPE-BRONCO AND ECONOLINE

Removal

1. Raise the vehicle.
2. Remove the clamps securing the outlet pipe to the muffler and support brackets (Figs. 1 or 2).
3. Separate the outlet pipe from the muffler and remove from the vehicle.

Installation

1. Position the outlet pipe to the muffler and support bracket at the rear of the vehicle and approximately 1 1/4 inches below the body sheet metal. (Also the intermediate support bracket on the Econoline Supervan models).
2. Install the retaining clamps to hold the outlet pipe in position.
3. Align the system and torque the retaining clamp nuts to the specifications shown in Part 26-01.
4. Start the engine and check the exhaust system for leaks.
5. Lower the vehicle.

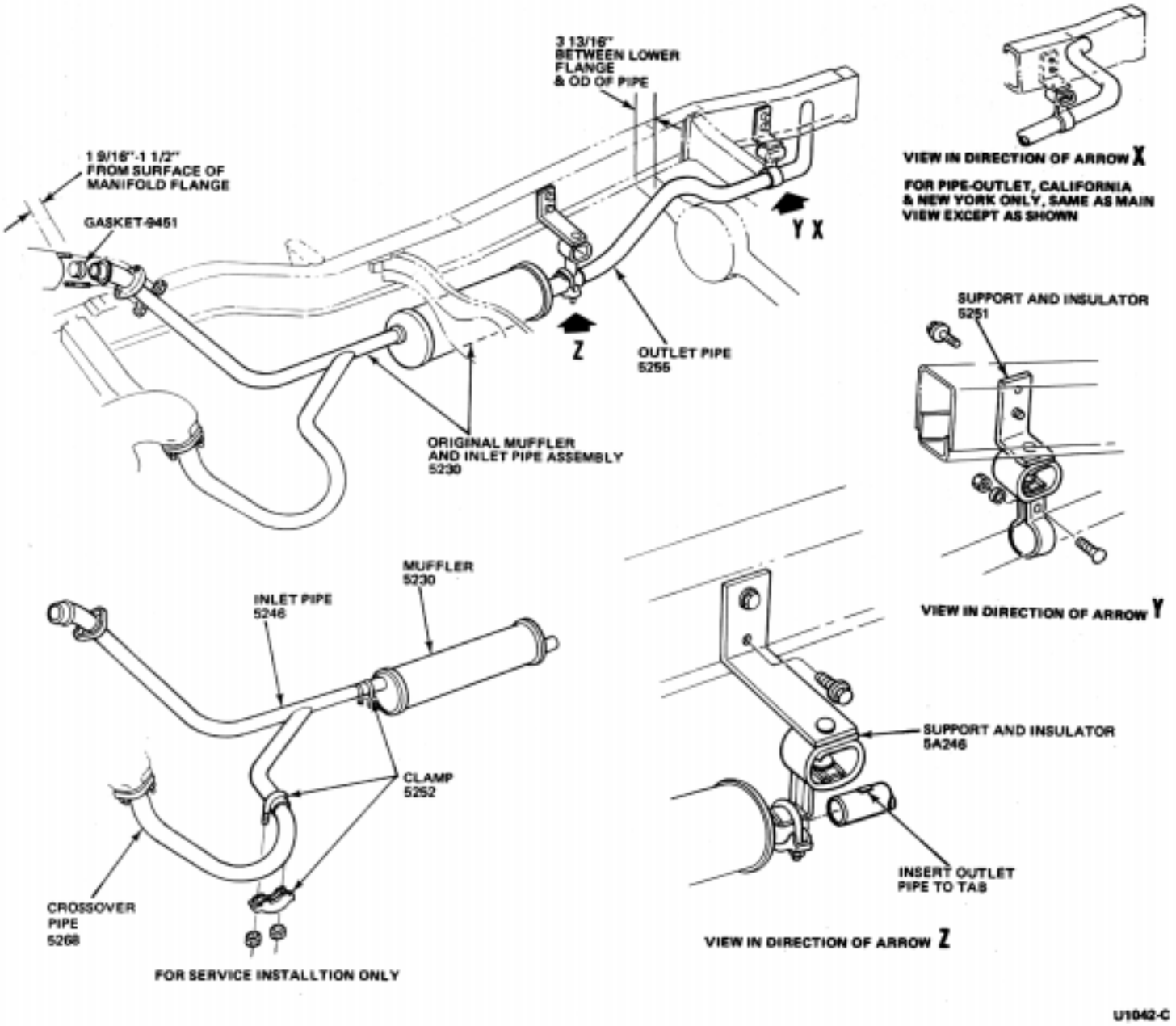

FIG. 1 Bronco V-8 Single Exhaust System

EXHAUST SYSTEM—F-100, 250-, 350

The typical exhaust systems are shown in Figs. 3 through 6.

The following procedures apply to 8-cylinder engine single exhaust systems.

Inlet Pipe

Removal

1. Loosen the outlet pipe clamps; then, slide the outlet pipe (all except cab models) toward the rear.
2. Temporarily support the muffler and inlet pipe in position with soft wire.
3. Remove the inlet pipe to manifold attaching nuts; then, remove the wire and pull the inlet pipe and muffler assembly away from the manifolds. Remove the flange gaskets.