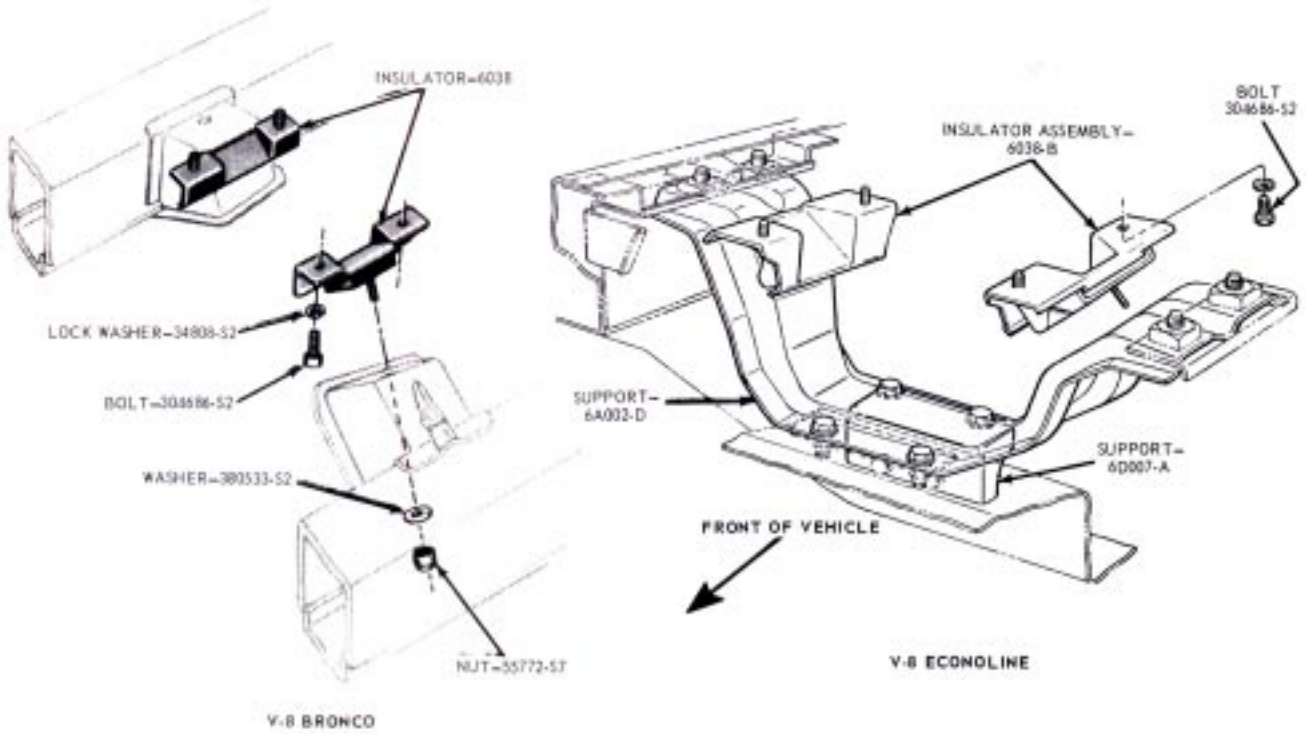

A 2781-B

FIG. 7 Engine Front Supports—Bronco and Econoline

insulator-to-engine bolts to specifications.
3. Install the insulator-to-chassis bracket nut and washer. Tighten the nut to specifications.
4. Install the fan shroud attaching bolts.

Bronco and Econoline

Removal

1. Raise the vehicle on a hoist.
2. Remove one nut attaching the engine support insulator to the support bracket.
3. Position transmission jack beneath the front of the oil pan. Raise the engine only enough to clear the support insulator bolt at the support bracket.
4. Remove the bolts holding the support insulator to the block, and remove the support insulator.

Installation

1. Position the support insulator on the block and install the attaching bolts. Tighten the bolts to specification.
2. Carefully lower the engine, guiding the support insulator bolt into the support bracket.
3. Install the nut attaching the engine support insulator to the support bracket. Tighten the nut to specifications.
4. Lower the vehicle.

ENGINE REAR SUPPORTS

The procedures given apply to either a right or left support Bronco only and F-100 and Econoline center mount (Figs. 8 and 9).

F-100

Removal

1. Remove the support insulator-to-crossmember attaching bolt and lock nut.
2. Remove the support insulator-to-transmission extension housing bolts and lock washers.
3. Raise the transmission with a floor jack. Remove the support insulator and retainer.

Installation

1. Position the support insulator and retainer on the transmission extension housing.
2. Install the support insulator-to-transmission extension housing bolts and lock washers. Torque the bolts to specifications. Lower the transmission.
3. Install the support insulator-to-crossmember attaching bolt and lock nut. Tighten the nut to specifications.

Check to see that the retainer does not contact the portion of the insulator which is attached to the crossmember.

Bronco

Removal

1. Raise the vehicle on a hoist.
2. Remove the skid plate, if so equipped. Remove the cotter pins, the attaching nuts and the attaching bolts of both support insulators, even though only one is to be replaced. Remove the washers, the retaining plates and the lower support insulators.
3. Position a transmission jack beneath the transmission. Raise the transmission, remove the spacer and the upper support insulator of the assembly to be replaced.

Installation

1. Position the upper support insulator and the spacer on the assembly to be replaced and lower the transmission.
2. Position the lower support insulators, retaining plates and washers, then install the attaching bolts and nuts. Tighten the nuts to specifications and install the cotter keys.
3. Install the skid plate, if so equipped.
4. Lower the vehicle.

Econoline

Removal

1. Raise the vehicle on a hoist.
2. Remove the insulator support bolt and nut securing the rear insulator support to the frame.

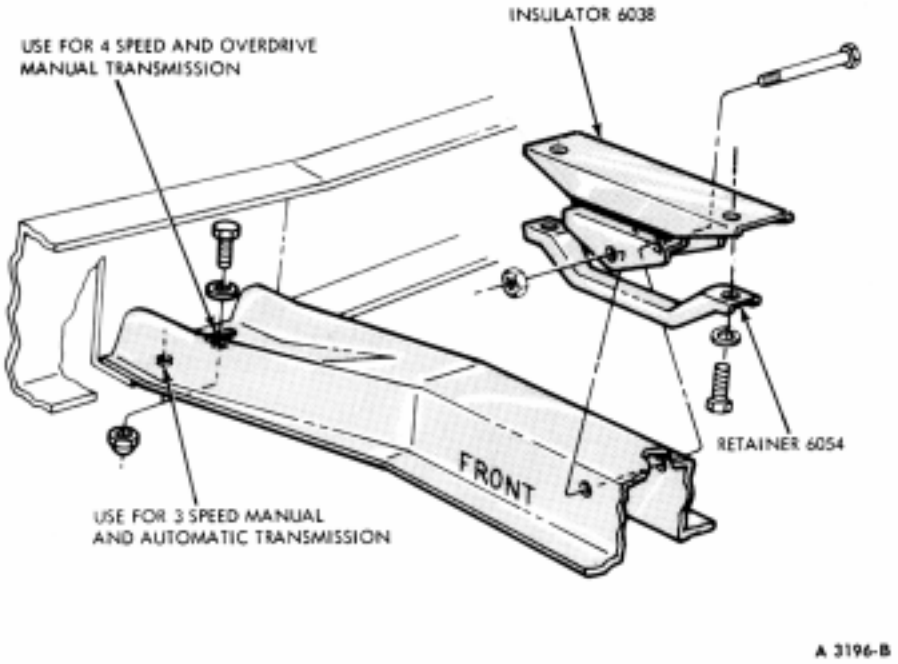

FIG. 8 Engine Rear Support—F-100

3. Raise the transmission with a jack so that the insulator support clears the frame.
4. Remove the insulator support bolt and nut securing the rear insulator support to the transmission, then remove the insulator and retainer.

Installation

1. Position the insulator support and retainer, then install the bolts securing the insulator support to the transmission. Tighten the bolts to specifications.
2. Lower the jack supporting the transmission and align the insulator support bolt hole with the hole in the frame assembly.
3. Install the bolt and nut securing the insulator support to the frame. Tighten to specification.
4. Lower the vehicle.

CRANKCASE VENTILATION SYSTEM

The crankcase ventilation system components for the various applications are shown in Fig. 10. **Any modification of the system prior to the first sale and registration of the vehicle is subject to Federal (U.S.A.) law and to the penalties under the laws of some states thereafter.**

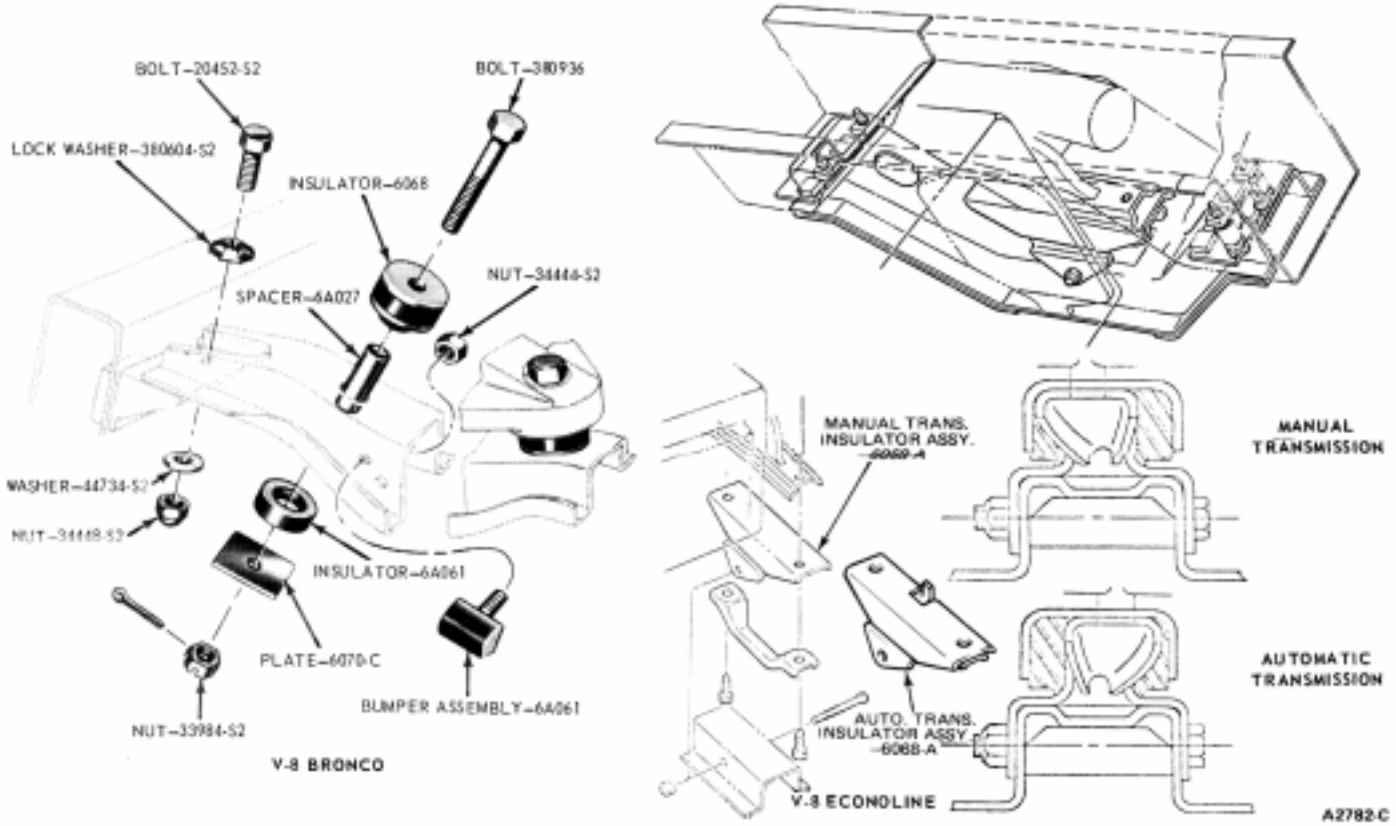

FIG. 9 Engine Rear Support—Bronco and Econoline