PART 24-41 Air Cleaner—Dry Type

COMPONENT INDEX	Page	COMPONENT INDEX	Page
AIR CLEANER BODY	41-08	Cleaning with Compressed Air	41-08
		Cleaning with Water	41-08
DESCRIPTION	41-01	REMOVAL AND INSTALLATION	41-01

DESCRIPTION

Dry type air cleaners are standard on all F-100-350, Bronco and Econoline Series trucks and on super duty engines in L, LN, LT and LNT series trucks. An optional dry type air cleaner is available on super duty engines in C-Series trucks and on 330, 361 and 391 CID engines in L, LN, LT and LNT series trucks. An air restriction gauge is installed on dry air cleaners used on super duty engines and on 330, 361 and 391 CID engines.

Air passes into the air cleaner and through a chemically treated and pleated paper element before entering the engine induction system.

REMOVAL AND INSTALLATION

Illustrations of the various types of air cleaners for the vehicle models and engine applications are shown in Figs. 1 thru 13. Reference to the illustrations will enable the mechanic to perform the required removal and installation and/or repair operations.

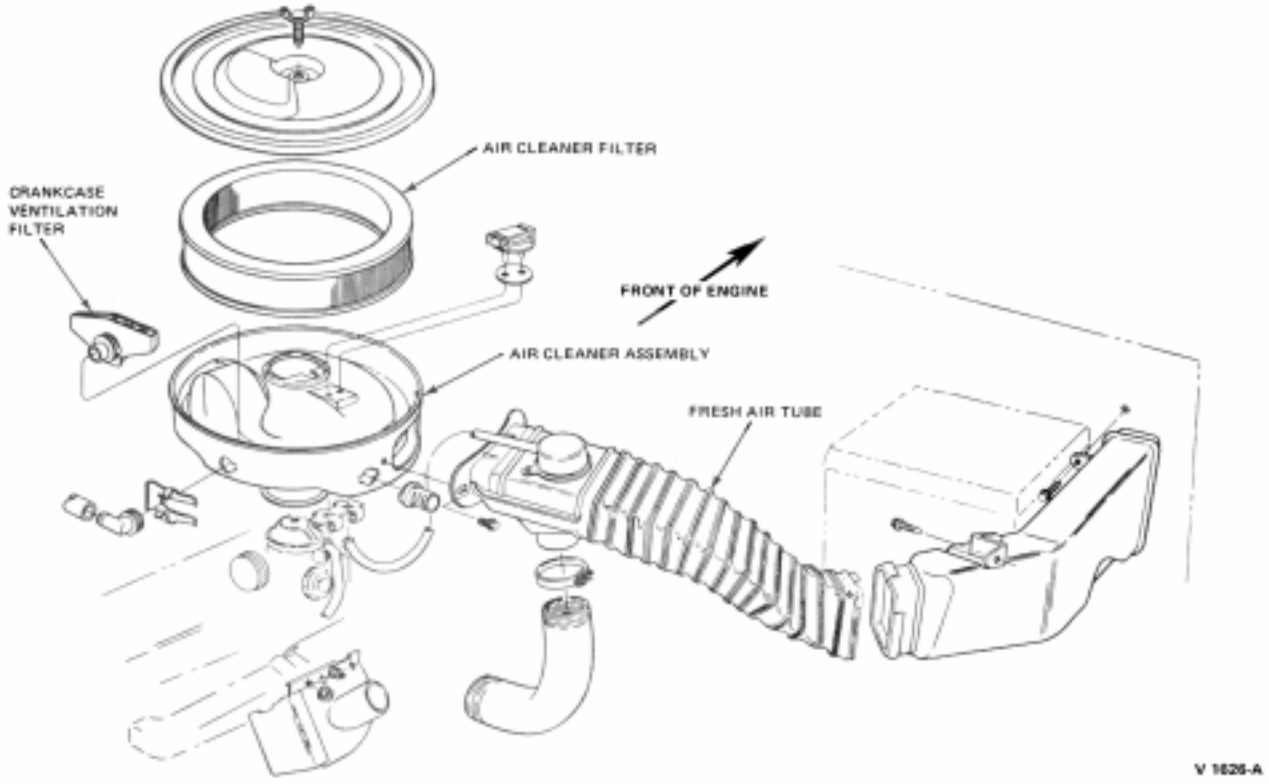

FIG. 1 Air Cleaner Assembly—Typical Bronco 200, F-100 240, 302, 330, 360, 390 Engine

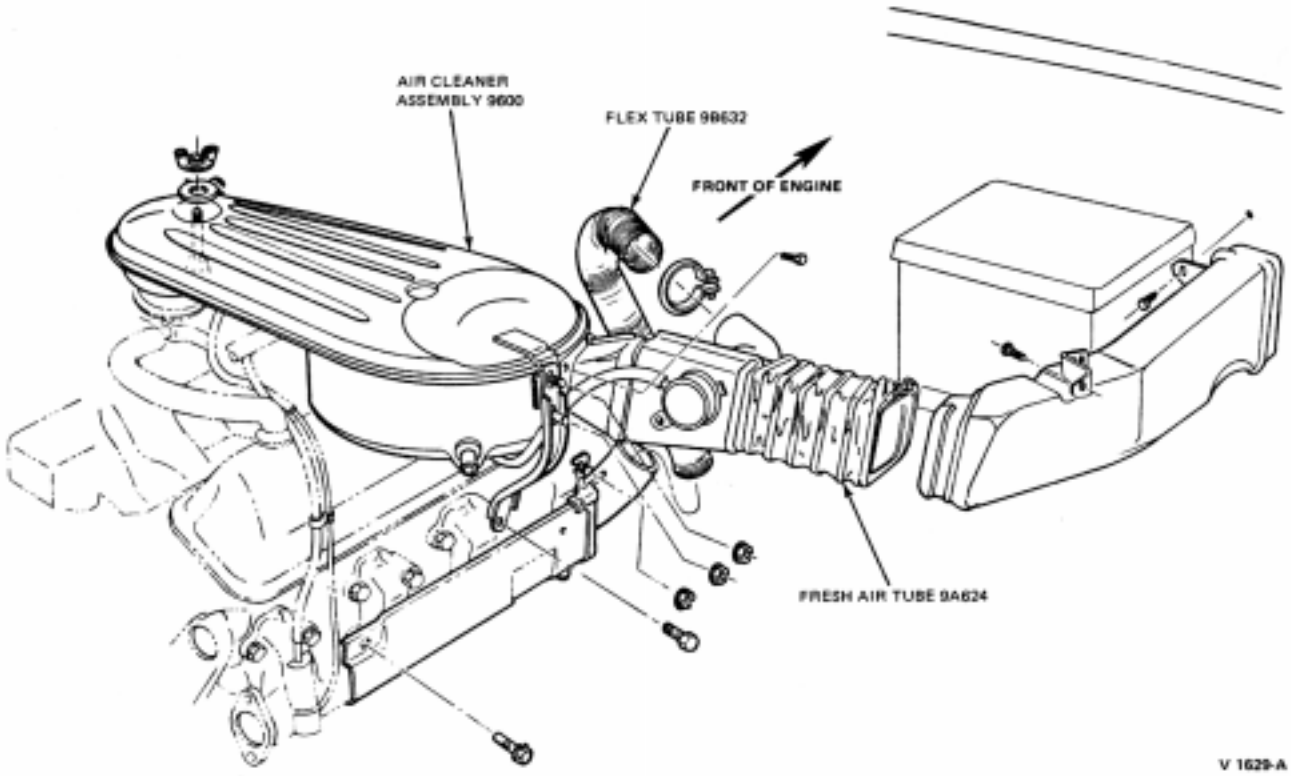

FIG. 4 Air Cleaner Assembly—Bronco 302 Engine

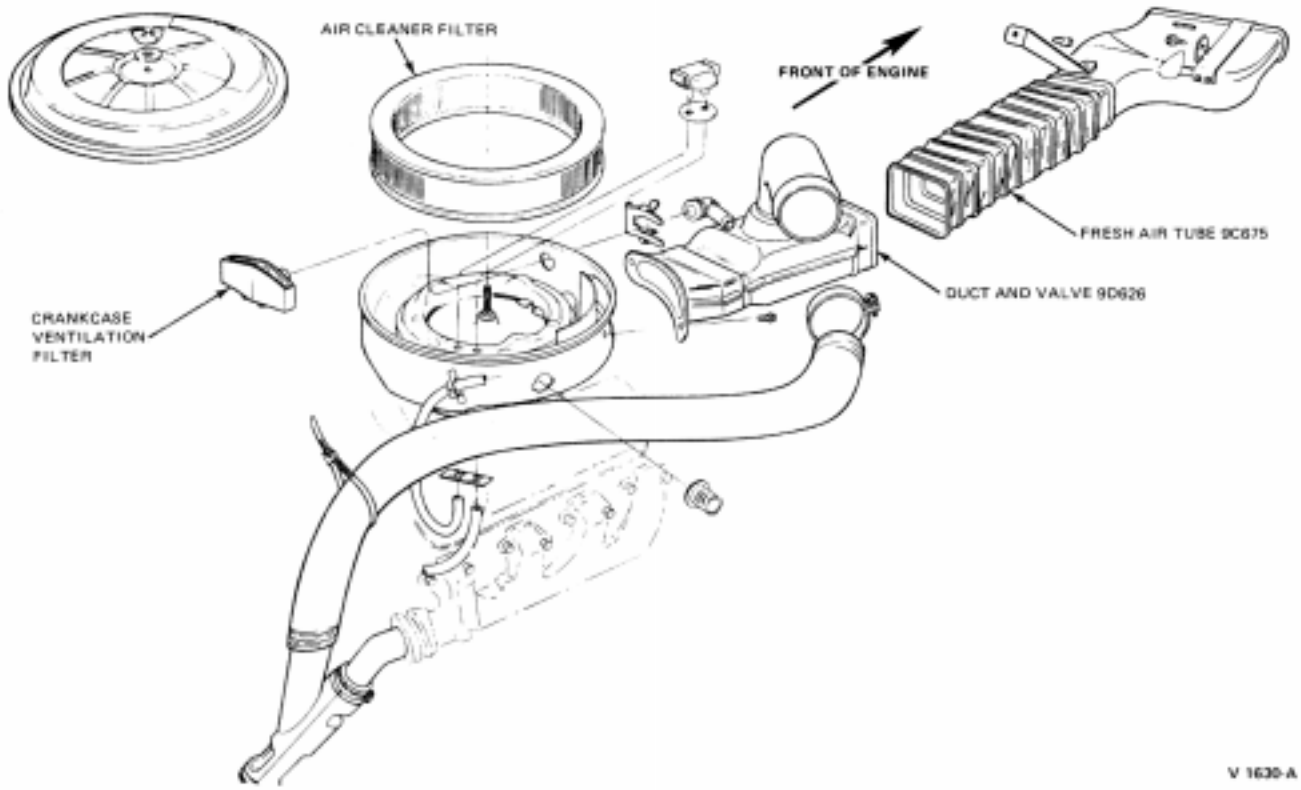

FIG. 5 Air Cleaner Assembly—Econoline 302 Engine