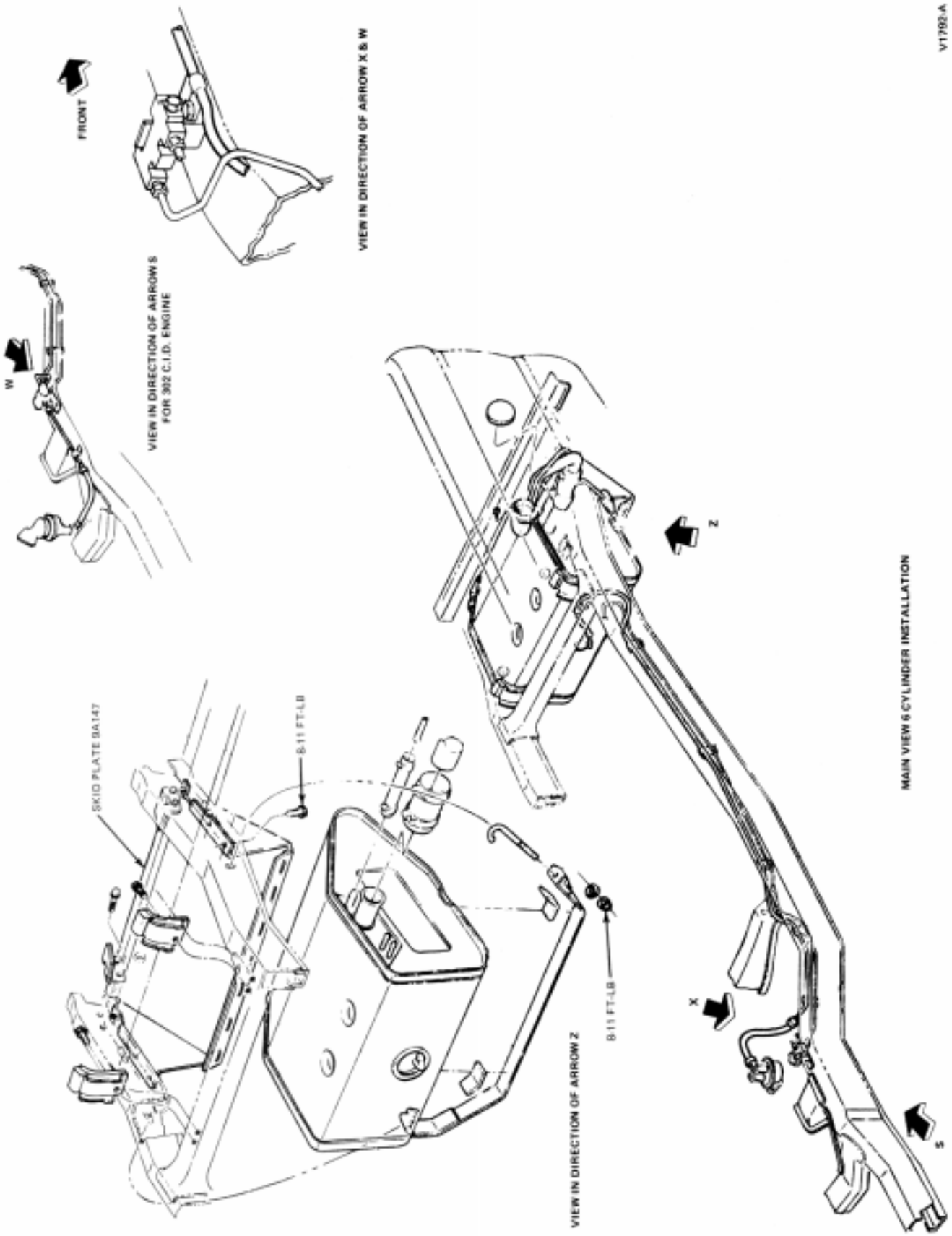

FIG. 8 Bronco Fuel Tank Installation—Without Vapor Emission Control

FIG. 9 Bronco Vapor Emission Control System

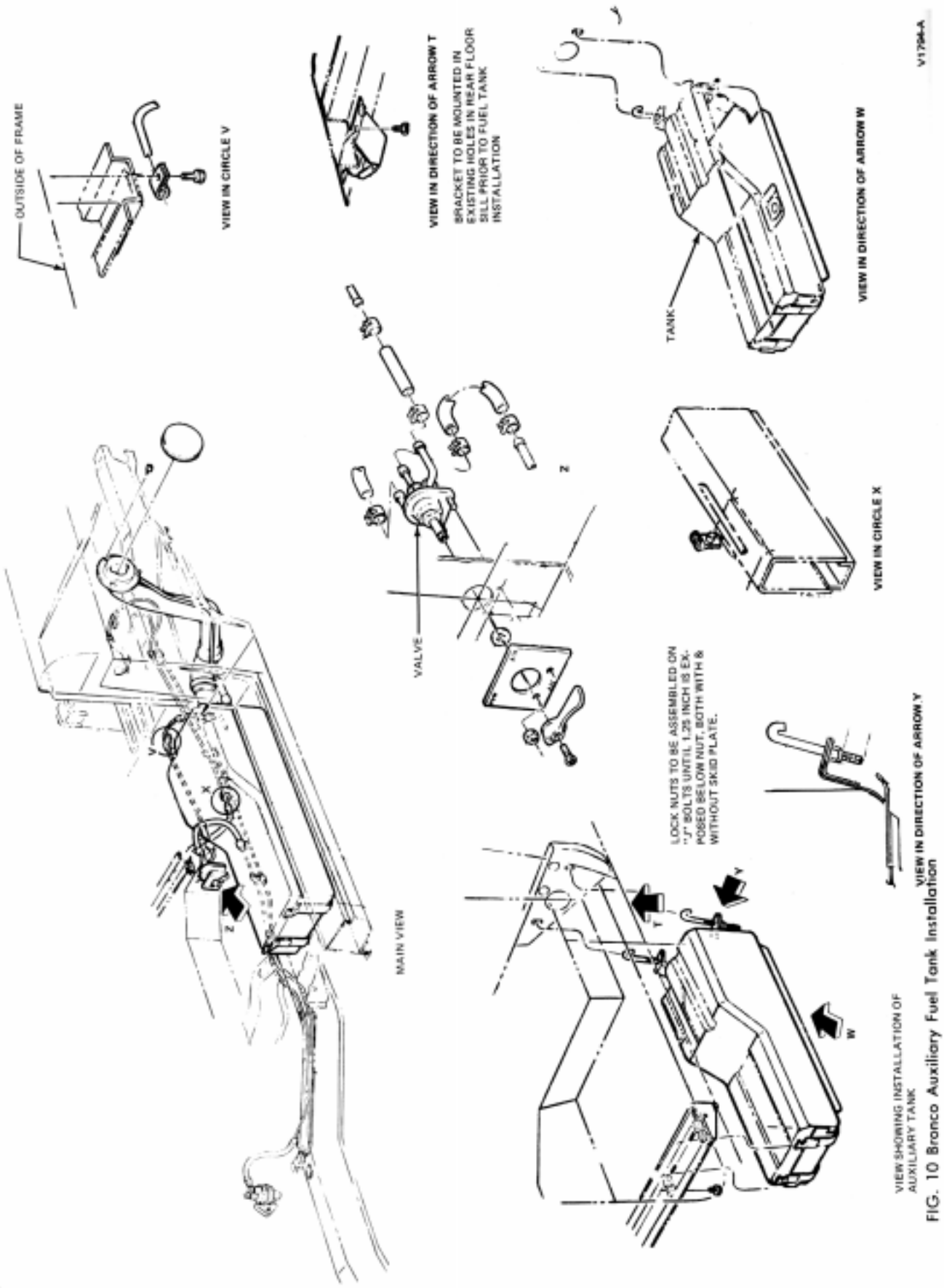

FIG. 10 Bronco Auxiliary Fuel Tank Installation