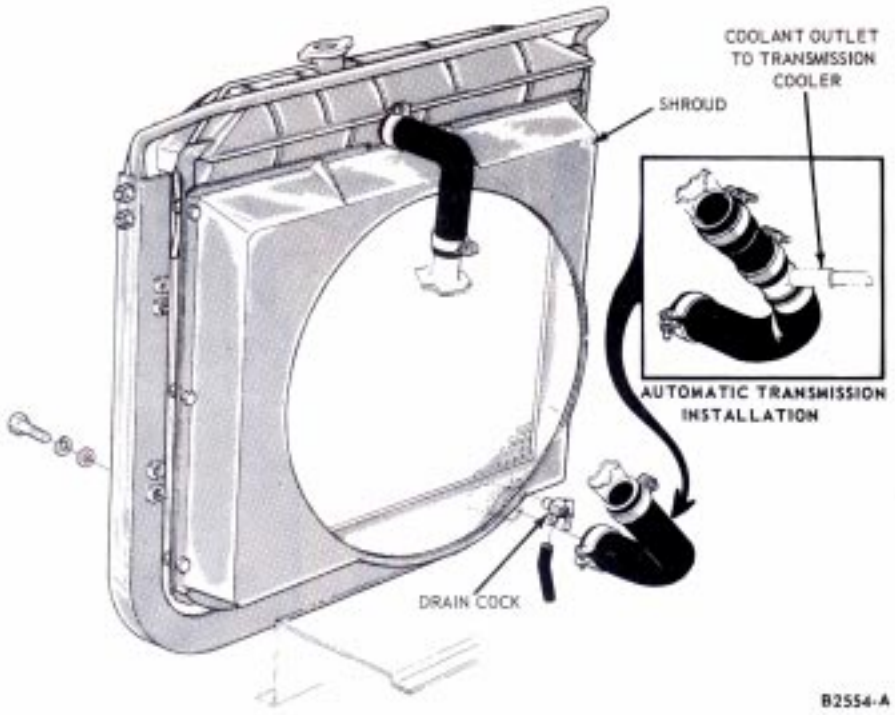

FIG. 6 Radiator Installation—P-Series

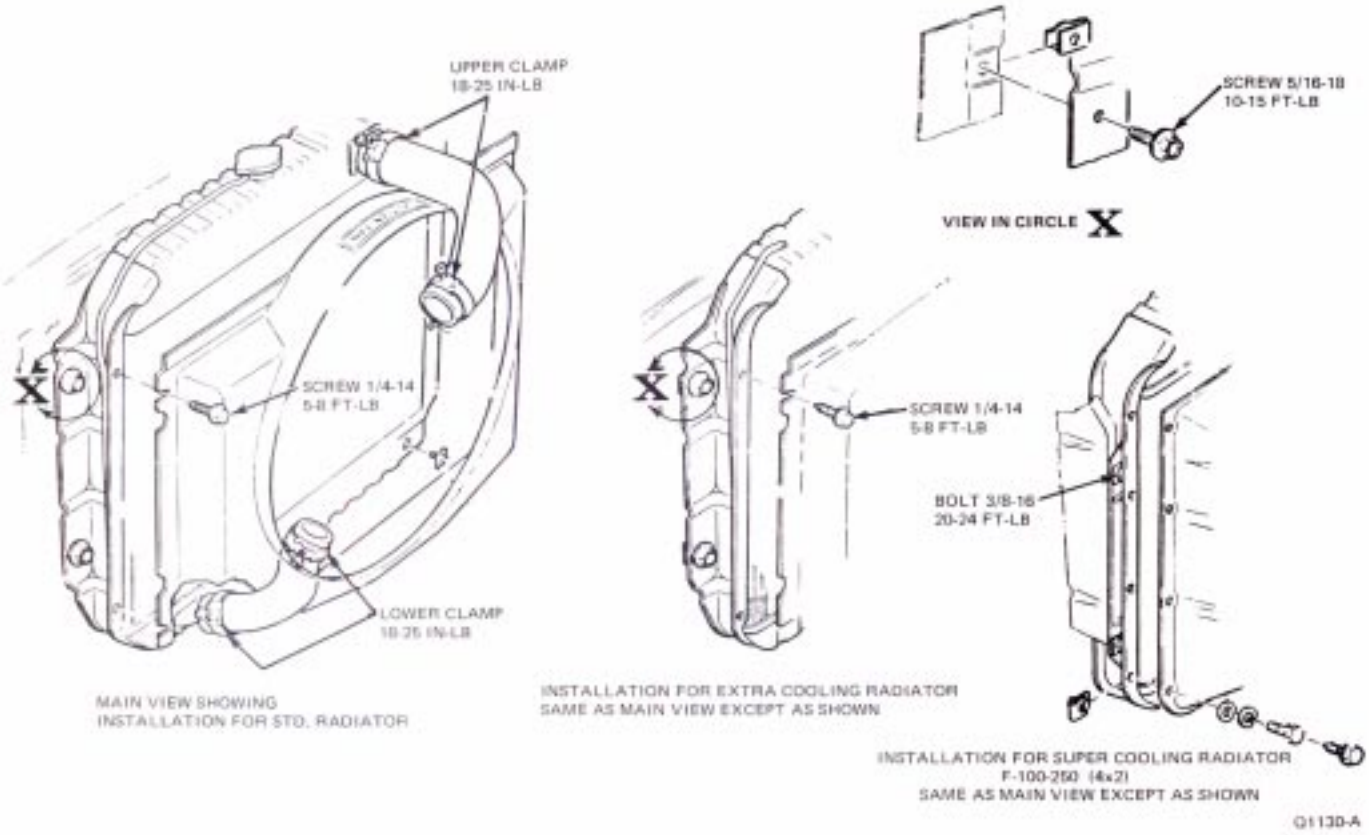

FIG. 7 Radiator Installation—F-100-250-350—8 Cylinder

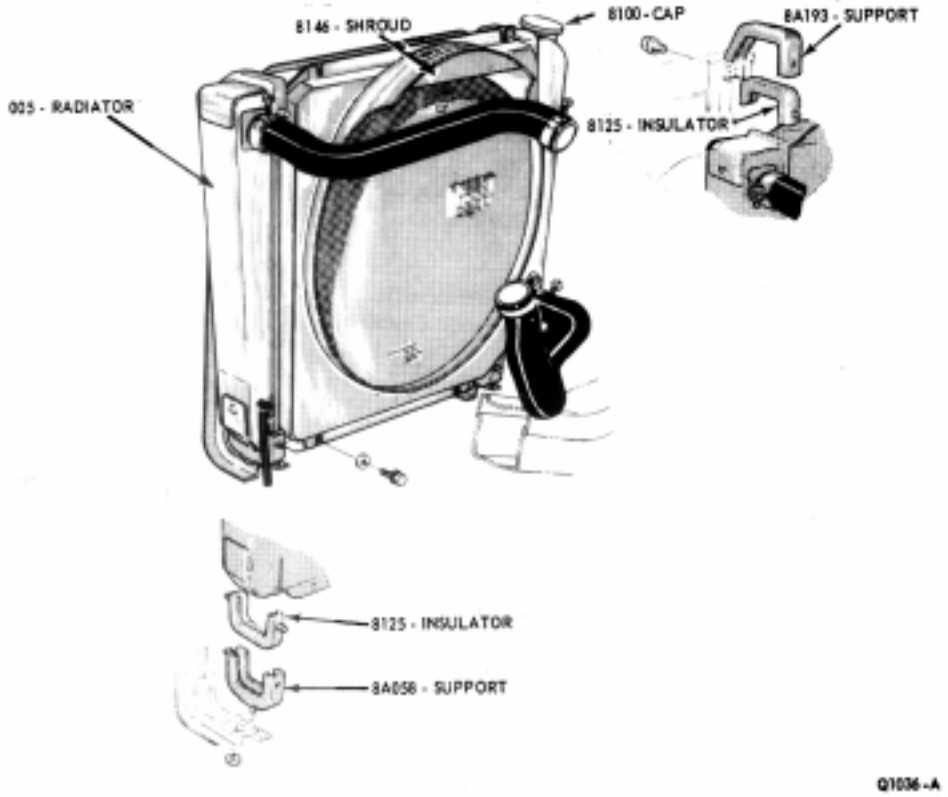

FIG. 4 Radiator Installation—Bronco 8 Cylinder

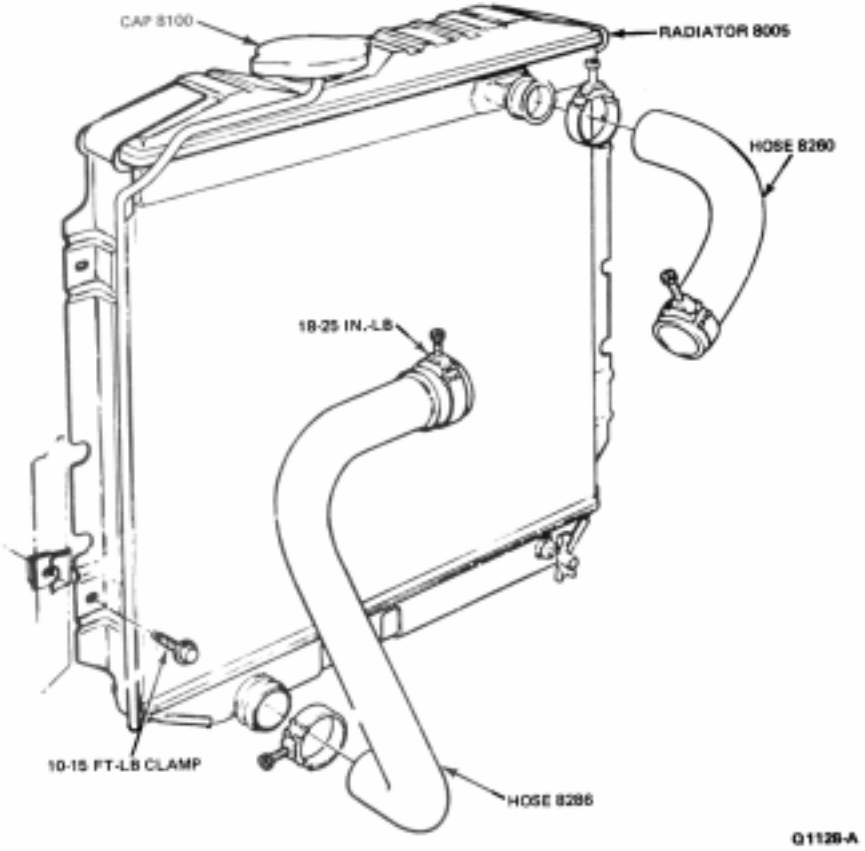

FIG. 5 Radiator Installation—Bronco 6 Cylinder