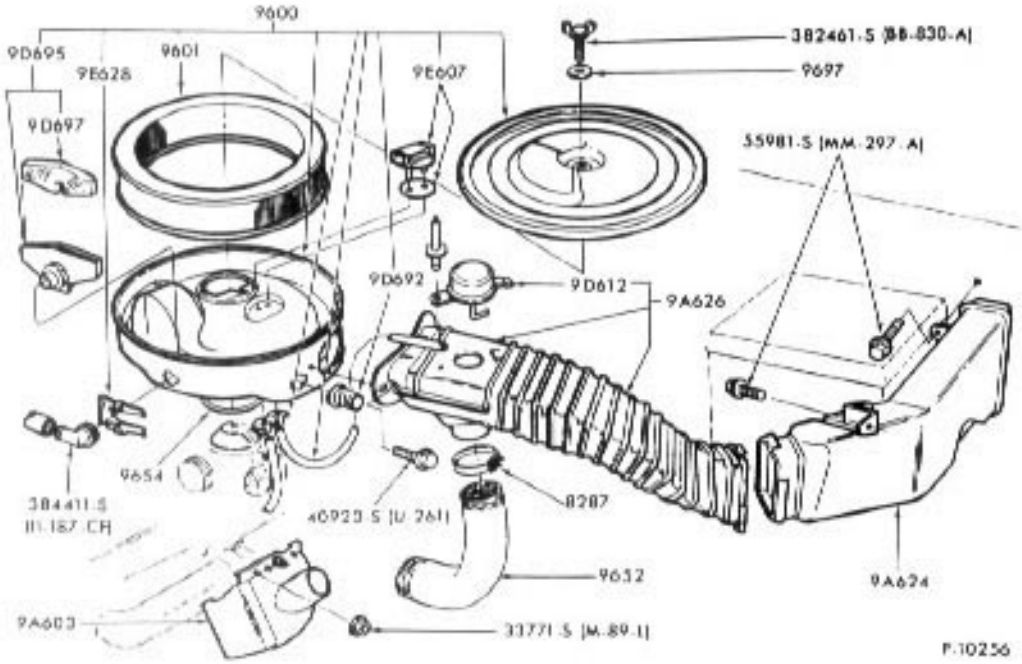

AIR CLEANER
1973/74 BRONCO--6 CYL.

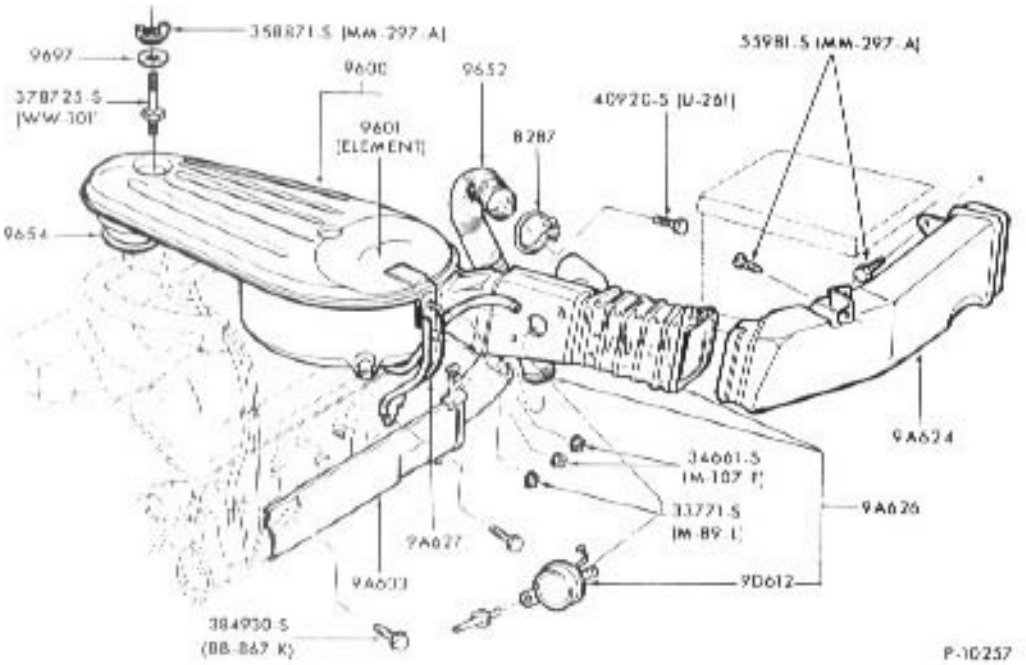

AIR CLEANER
1973/77 BRONCO--8 CYL.

COPYRIGHT ©1984 — FORD MOTOR COMPANY — DEARBORN, MICHIGAN