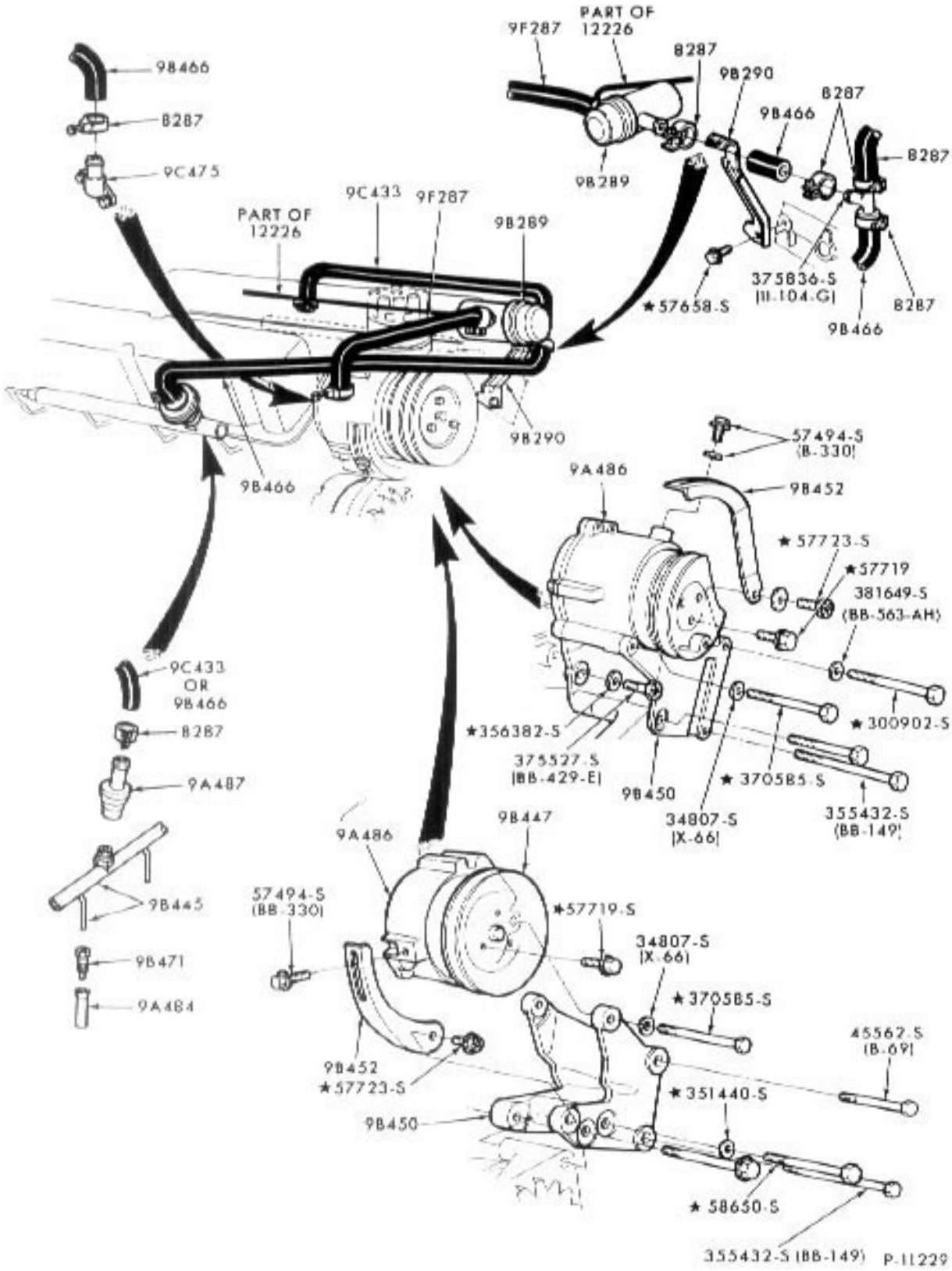

THERMACTOR EMISSION CONTROL SYSTEM
1974 BRONCO -- 8 CYL. 302

COPYRIGHT ©1984 — FORD MOTOR COMPANY — DEARBORN, MICHIGAN