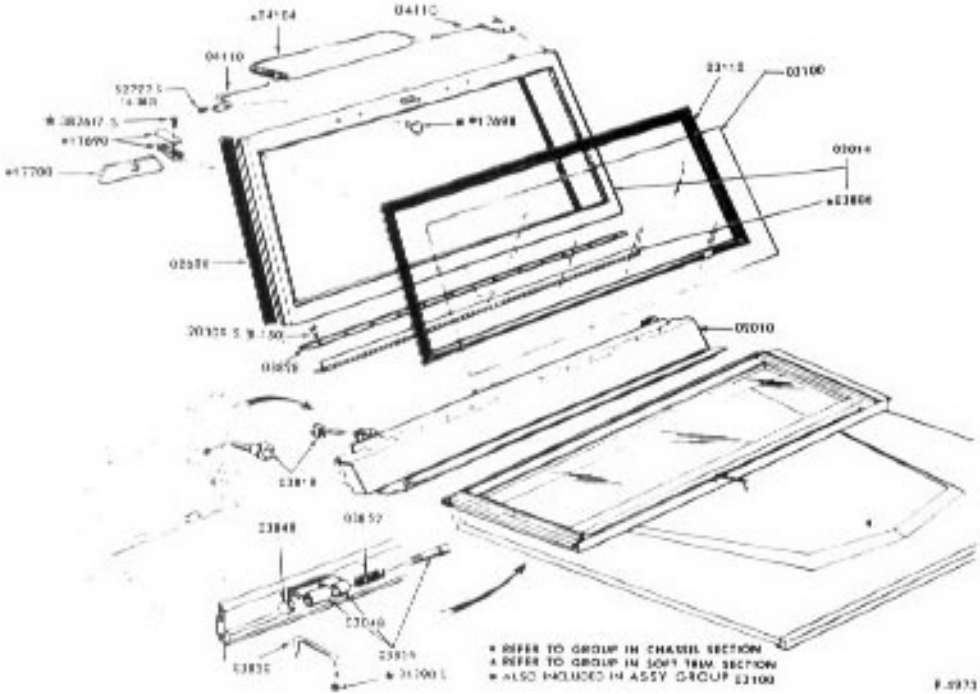

WINDSHIELD and RELATED PARTS
1973/77 BRONCO