PART 42-04 Front Door Window Glass and Mechanisms

COMPONENT INDEX Applies to Models as Indicated	MODEL APPLICATION							
	All Models	Bronco	Econoline	F-Series	L-Series	C-Series	W-Series	B-Series
ADJUSTMENTS		04-1	04-1	04-1				
REMOVAL AND INSTALLATION								
Glass – Door		04-3	04-3	04-4	04-4	04-4	04-5	
Regulator – Window		04-3	04-2	04-4	04-4	04-4	04-5	
Run – Glass Rear		04-6						
Weatherstrip – Belt			04-5					
A page number indicates that the item is for the vehicle(s) listed at the head of the column.								

ADJUSTMENTS

WINDOW MECHANISM ADJUSTMENT

Econoline

1. Remove the trim panel from the door, if so equipped.
2. Remove the access cover from the door.
3. Loosen the front run retainer and division bar lower attaching screw and the rear run retainer lower attaching screw (Items C and D, Fig. 1).
4. Lower the window glass until the top edge of the glass is approximately four inches above the belt line (Fig. 1).
5. Tighten the screws (Items C and D) and check the operation of the window mechanism.
6. Install the access cover and, if so equipped, the trim panel on the door.

Bronco

1. Lower the window glass until the top edge of the glass is flush with the bottom of the window opening. Then, position the lower stop bracket bumper against the glass channel (Fig. 2) and tighten the attaching screw.
2. Loosen the rear run and bracket lower attaching screw.
3. Raise the window until the top edge of the glass is approximately four inches above the bottom of the window opening. Allow the rear run and bracket to move as necessary for proper alignment with the window glass. Then, tighten the rear run and bracket lower attaching screw.
4. Lower the glass and loosen the division bar lower run and bracket attaching screw (Fig. 2). Position the division bar lower run against the glass and tighten the attaching screw.

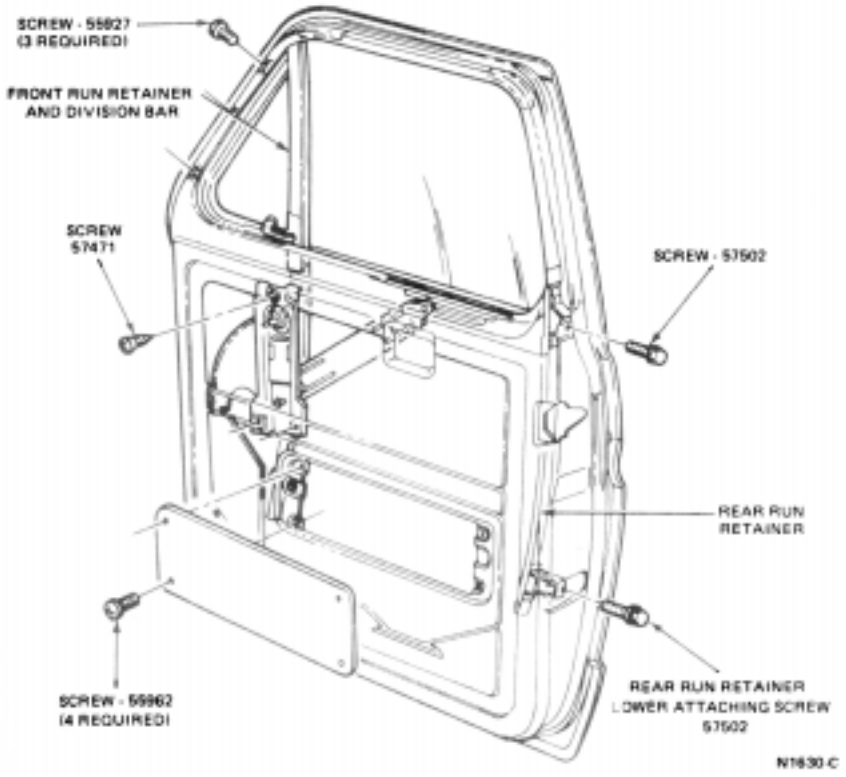

FIG. 1 Front Door Window Glass Adjustment—Econoline

DOOR WINDOW ADJUSTMENT

F-Series

The door trim panel and watershield must be removed to adjust the window mechanism.

1. Loosen the screw at the lower end of the vent window division bar (Fig. 3).
2. Loosen the rear run two lower attaching screws (Fig. 3).
3. Lower the glass 1/2 of the way down.
4. Tighten all of the attaching screws and check the operation of the window mechanism.
5. Lower the glass and check the height of the top edge of the glass. It should be about flush with the belt line. If adjustment is necessary, loosen the regulator attaching screws and rotate the regulator down and forward to lower the glass, or up and rearward to raise the glass. Then, tighten the regulator attaching screws when the correct height is obtained.

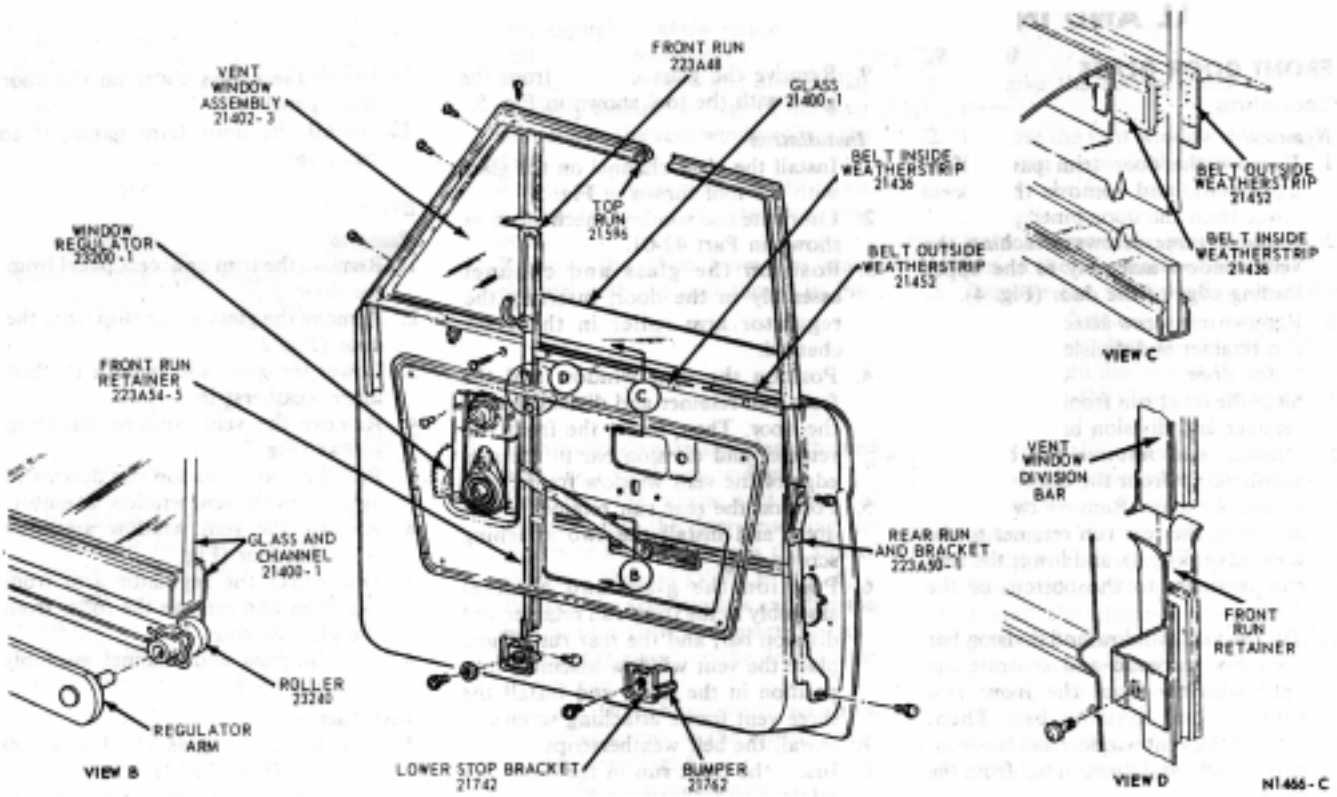

FIG. 2 Door Window Mechanism—Bronco

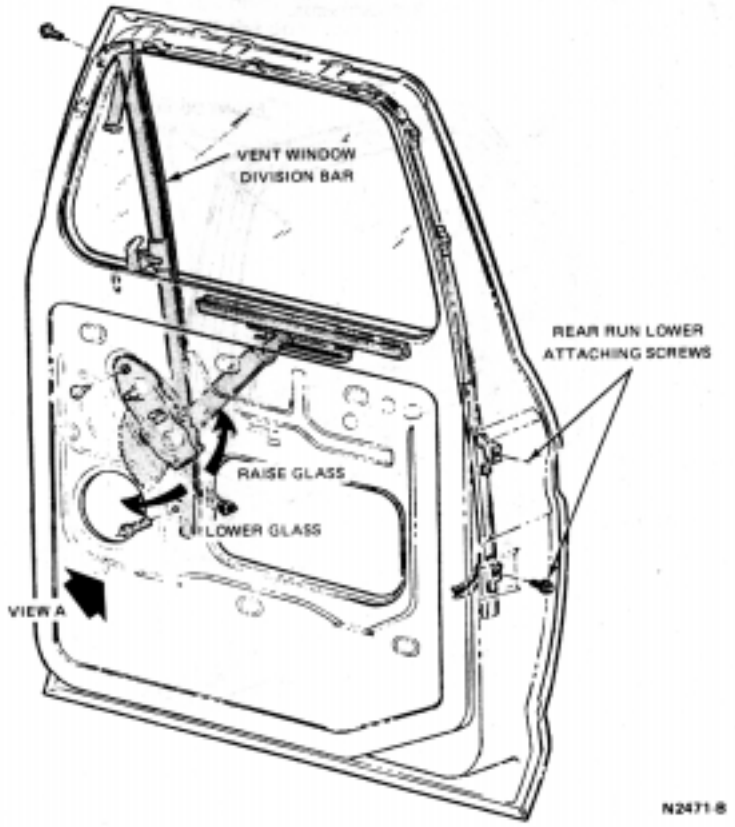

FIG. 3 Window Mechanism Adjustment—F-Series Truck

PART 44-11 Door Latches and Locks

COMPONENT INDEX Applies to Models as Indicated	All Models	Bronco	Econoline	F-Series	L-Series	C-Series	W-Series
ADJUSTMENTS - Door Latch Striker	11-1						
REMOVAL AND INSTALLATION							
Handle—Door Inside	11-6						
Door Outside		11-8	11-8	11-7	11-7	11-7	11-6
Latch—Door		11-3	11-2	11-1	11-1	11-1	11-1
Lock Cylinder	11-5						
Remote Control—Door Latch		11-5	11-4	11-4	11-5	11-5	11-5

A page number indicates that the item for the vehicle(s) listed at the head of the column.
N/A indicates that the item is not applicable to the vehicle(s) listed.

ADJUSTMENTS

LATCH STRIKER ADJUSTMENT

Use tool No. T70P-2100-A where required.

The striker pin can be adjusted laterally and vertically as well as fore and aft. The latch striker should not be adjusted to correct door sag. The latch striker should be shimmed to get the clearance shown in Figs. 1 and 2, between the latch striker and the latch. To check this clearance, clean the latch jaws and the striker area, and then apply a thin layer of dark grease to the latch striker. As the door is closed and opened, a measurable pattern will result. Move the striker assembly laterally to provide a flush fit at the door and the body. **Do not use more than two shims.**

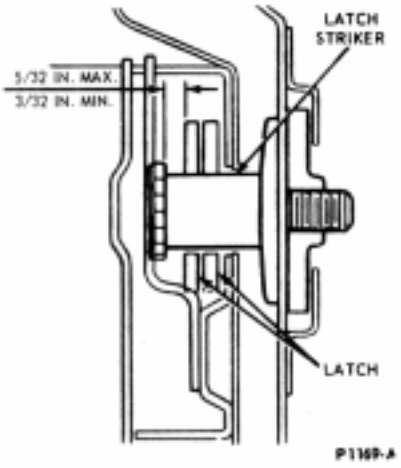

FIG. 1 Latch Striker Adjustment—Typical

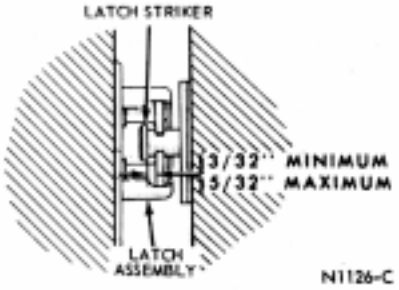

FIG. 2 Door Latch Striker Adjustment—Bronco

REMOVAL AND INSTALLATION

DOOR LATCH

F-100 Through F-750

Removal

1. Remove the trim panel and watershield from the door.
2. Disconnect the rods from the latch assembly (Fig. 3).
3. Remove the latch assembly attaching screws and remove the latch from the door.

Installation

1. Install the rod retaining clips in the new latch assembly.
2. Position the latch in the door and install the latch attaching screws.
3. Connect the rods to the latch assembly and check the operation of the latch.
4. Install the watershield and trim panel on the door.

L-W-and C-Series

Removal

1. Remove the door trim panel and/or access hole cover attaching screws and remove the trim panel and/or the access hole cover.
2. Disconnect the remote control link and the push button rod (Figs. 4 through 8) from the latch assembly.
3. Remove three screws attaching the latch to the door and remove the latch assembly.

Installation

1. Lubricate the latch assembly with Polyethelyne grease (Part Number 19584).
2. Position the latch assembly to the door and install the three attaching screws.

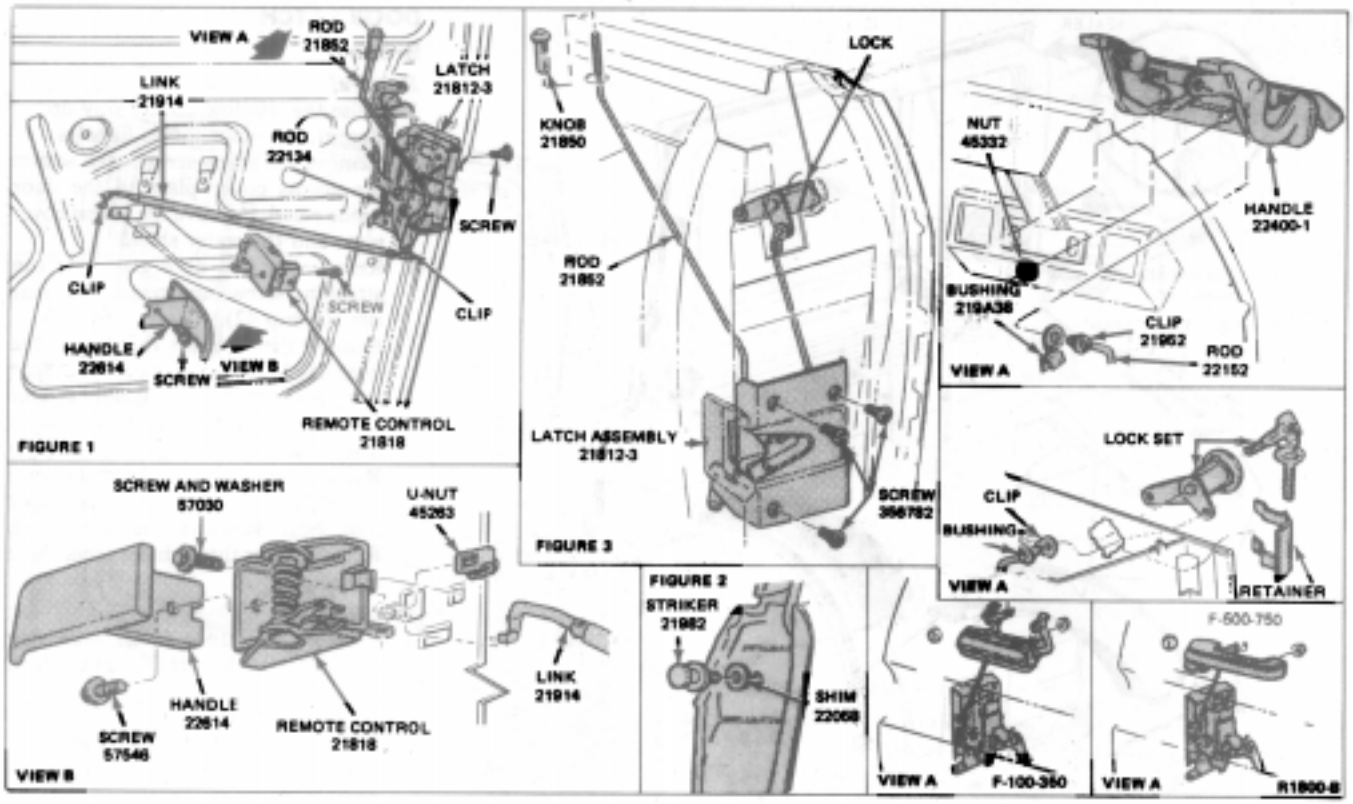

FIG. 3 Door Latch Installation—F-Series

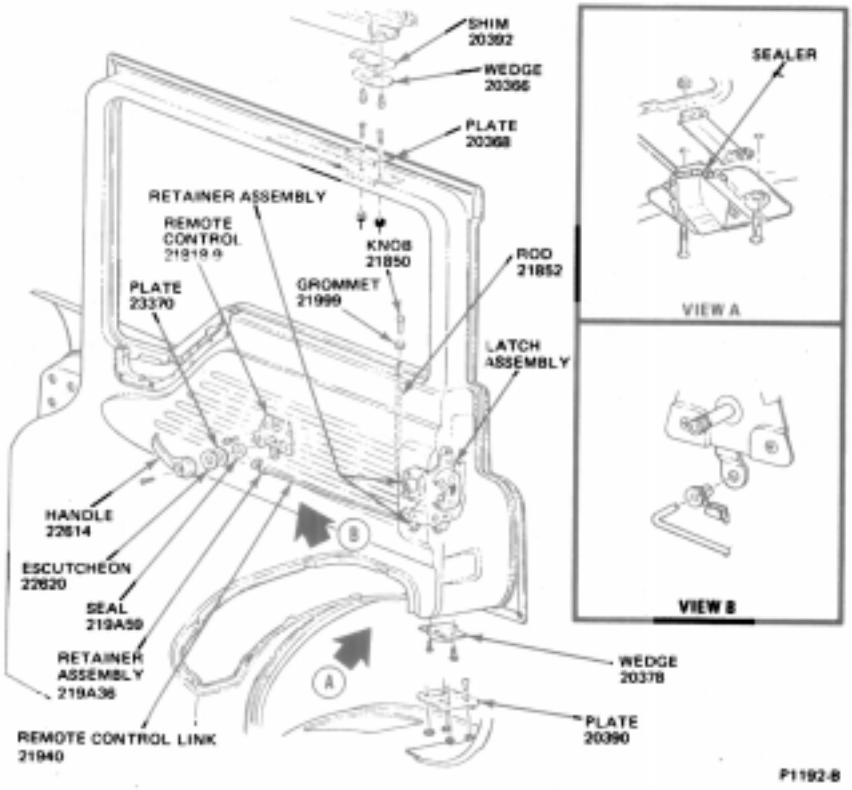

FIG. 4 Door Latch Installation—C-Series

3. Connect the push button rod and the control link to the latch assembly.
4. Check the operation of the latch and install the trim panel and/or access hole cover.

FRONT DOOR LATCH

Econoline

Removal

1. Remove the access cover from the door inner panel.
2. Disconnect the remote control link and the push button rod (Fig. 9). from the latch assembly.
3. Remove three screws attaching the latch to the door and remove the latch assembly.
4. Remove the link and rod retainers from the latch assembly.

Installation

1. Install the rod and link retainers on the latch assembly.
2. Position the latch to the door and install the three attaching screws.
3. Connect the push button rod and the remote control link to the latch assembly.
4. Check the operation of the latch and install the door inner panel.

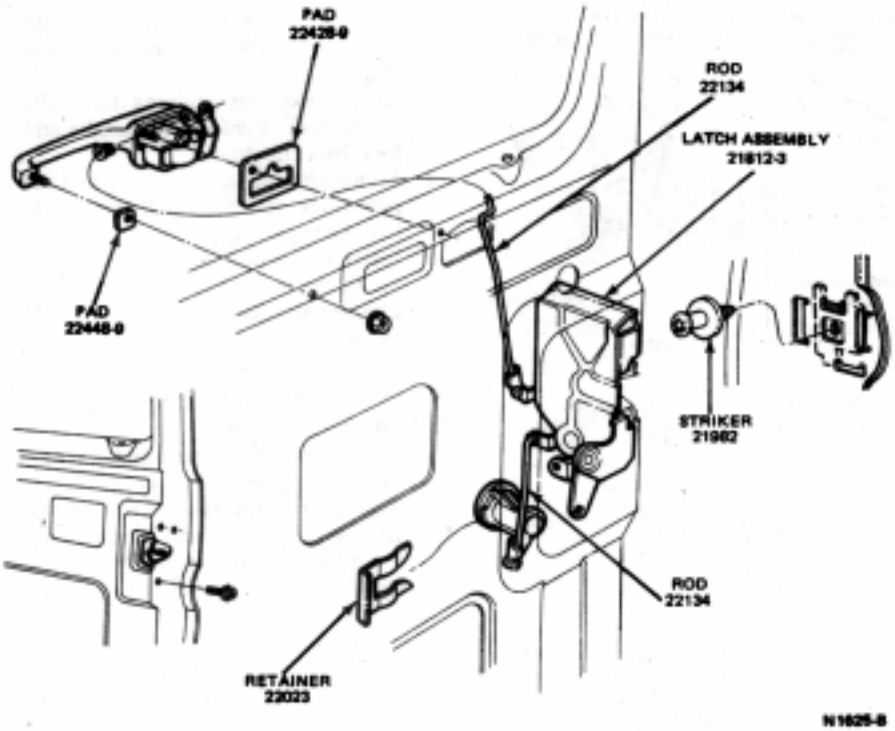

FIG. 9 Door Latch Installation—Econoline

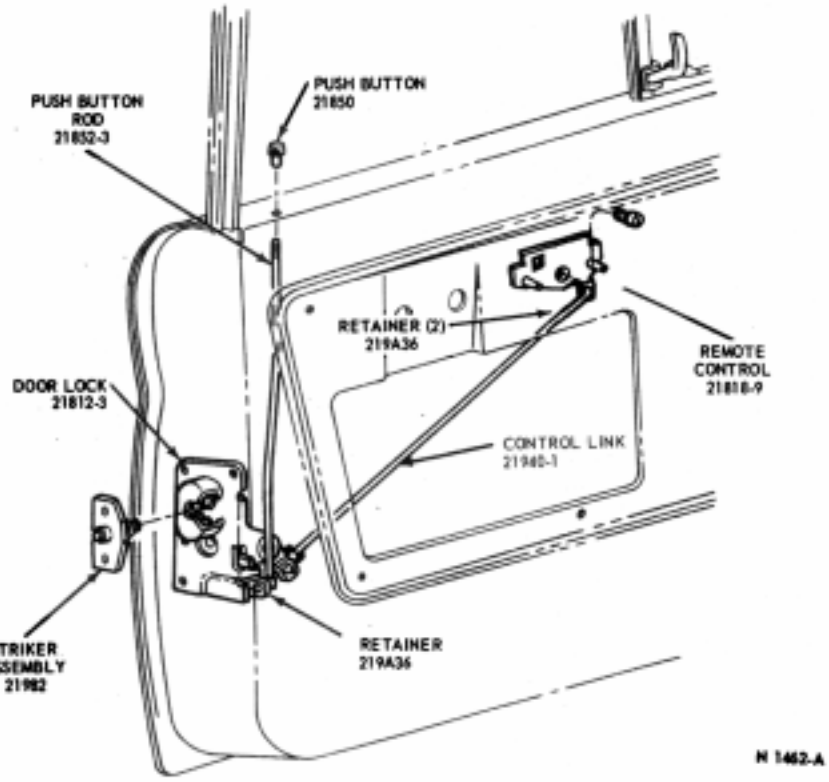

FIG. 10 Door Latch and Remote Control Installation—Bronco

shield to the inner surface of the inner panel.

9. Install the access hole cover and/or trim panel.

DOOR INSIDE HANDLE—CARGO FRONT SIDE DOOR

Econoline

Removal

1. Remove the trim panel from the door, if so equipped (Group 45).
2. Disconnect the rod at the door inside handle bellcrank.
3. Remove three screws attaching the inside handle bracket to the door inner panel and remove the handle.
4. Remove the mounting bracket from the inside handle.

Installation

1. Install the mounting bracket on the inside handle.
2. Position the handle and bracket assembly to the door inner panel and install the three attaching screws.
3. Connect the rod to the inside handle bellcrank.
4. Install the trim panel on the door, if so equipped.

DOOR INSIDE HANDLE

All Except F-100 Through F-750

Removal

To remove the window regulator handle and/or the inside door handle, remove the set screw(s) that secure the handle(s) to the serrated shaft(s) protruding from the inside door panel.

Installation

1. With the window in the down position, install the window regulator handle on the serrated shaft of the regulator assembly so that the handle points in a forward direction with the center line of the handle approximately 75 degrees above the horizontal line of the body. Install the set screw to secure the handle to the serrated shaft.
2. Install the door handle on the serrated shaft of the remote control assembly so that the handle points in a forward direction with the center line of the handle approximately 75 degrees above the horizontal line of the body. Install the set screw to secure the handle to the serrated shaft.

F-100 Through F-750

To remove the door inside handle, remove one screw and remove the handle (Fig. 3).

DOOR OUTSIDE HANDLE

W-Series

1. Remove the door check strap and the lower inner panel from the door.

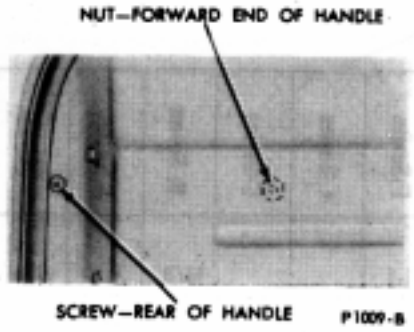

FIG. 14 Typical Door Outside Handle Removal

6. Install the access hole cover plate and/or trim panel.

DOOR OUTSIDE HANDLE—CARGO FRONT SIDE

Econoline

Removal

1. Remove the trim panel from the door, if so equipped.
2. Remove two nuts retaining the outside handle to the door. Remove the handle and pads from the door (Fig. 15).

Installation

1. Position the two pads and the outside handle to the door, and install the two retaining nuts.
2. Check the operation of the latch, and install the trim panel, if so equipped.

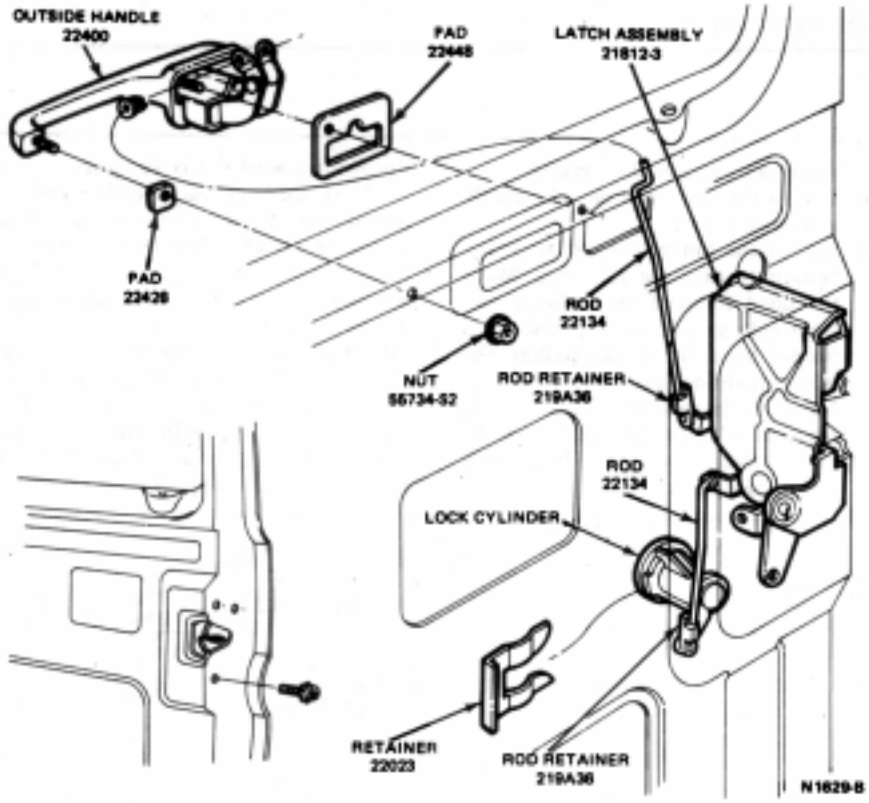

FIG. 15 Door Outside Handle and Locking Mechanism—Econoline

DOOR OUTSIDE HANDLE

Bronco

Removal

1. Remove the inside door handles, door access cover plate, and water shield.
2. Remove the retainer from the door lock control rod. Disconnect the rod from the outer door handle (Fig. 13).
3. Remove the retaining nut and lock washer that secure the front of the outside handle to the door panel.
4. Remove the screw and lock washer that secure the rear of the outside handle to the door from the weatherstrip flange.
5. Pull the outside door handle from the door, and remove the two door handle pads.

Installation

1. Position the door pads and the outside door handle (Fig. 13) on the door. When placing door pads on the door outer panel, make sure that the contour of the pads align with the contour of the handle mating surfaces.
2. Secure the front of the outside handle with a lock washer and retaining nut. Secure the rear end of the handle with the lock washer and screw.
3. Position the door lock control rod on the door handle and secure the rod with the retainer.
4. Install the water shield, door access cover, and the inside door handles.