PART 41-14 Conventional Rear Seats

Applies To Bronco, Econoline and F-Series Crew Cab

REMOVAL AND INSTALLATION

SEAT CUSHION AND BACK ASSEMBLY

Bronco

The rear seat cushion and back assembly is attached to the floor with four retaining bolts (Fig. 1). When installing the seat assembly to the floor, tighten the retaining bolts to 7-12 ft-lb torque.

Econoline

The rear seat and cushion assemblies are attached to the floor pan as shown in Fig. 2. When installing the seat assembly to the floor, tighten the attaching bolts to 45-60 ft-lb torque.

F-Series Crew Cab

The rear seat and track assembly is attached to the floor pan with four bolts on each side (Fig. 3). When installing the seat and track assembly, apply sealer around the bolt holes between the track support and the floor pan. Tighten the eight attaching bolts to 18-32 ft-lb torque.

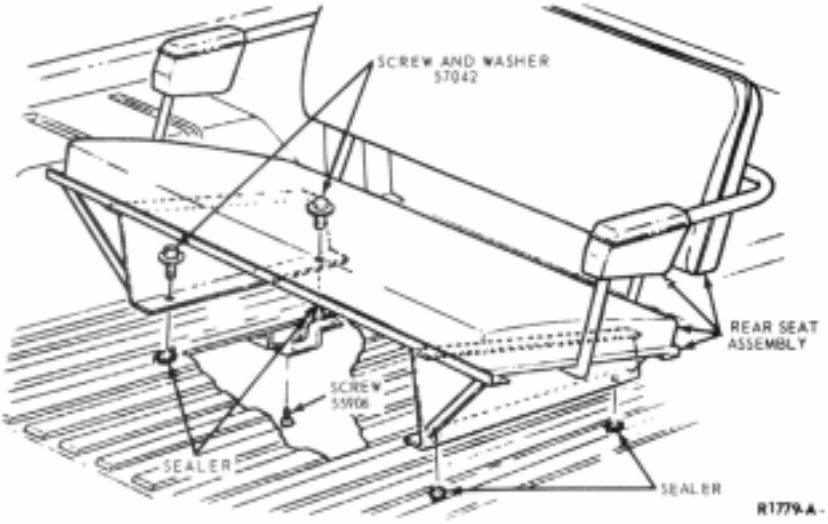

FIG. 1 Rear Seat Cushion and Back Assembly—Bronco

REMOVAL AND INSTALLATION

SEAT TRACK—MANUAL BENCH TYPE

F-100-750 And L-And W-Series

Removal

1. Remove the seat track-to-floor pan retaining screw and washer assemblies (three on each side) and lift the seat and track assembly out of the vehicle (Fig. 3).
2. Disconnect the seat track latch tie rod from the latches on the seat tracks.
3. Remove the seat track-to-seat cushion (screw and washers) and remove the tracks from the cushion.

Installation

1. Lubricate the seat track assemblies. Assemble the seat tracks to the cushion assembly with the anti-squeak pads (and spacers if so equipped) fitting over the studs between the track and cushion (Fig. 3). Install the track-to-cushion screw and washers and tighten to specification (see Specifications Section).
2. Connect the tie rod to the latch on each seat track.
3. Lift the seat and track assembly into the cab and secure it to the floor pan with the retaining screw and washer assemblies. Tighten the screws to specifications (see Specifications in this Part).

C-Series

Removal

1. Remove two seat track-to-floor pan retaining nuts and washers from each track (Fig. 2).
2. Lift the seat up to free the seat track studs from the floor pan, and then remove the seat and track assembly from the vehicle.
3. Disconnect the latch spring from the latch on the right seat track assembly and disconnect the latch tie rod from the latch (Fig. 2).
4. Remove the two right seat track-to-cushion screw and washer assemblies and remove the track from the cushion.
5. Separate the tie rod from the adjuster handle on the left track. Remove the two left track-to-cushion screw and washer assemblies and remove the track and adjuster handle assembly from the cushion.

Installation

1. Position the left seat track to the cushion with the anti-squeaks and spacers between the track and cushion. Position the retaining nut on the upper side of the cushion frame front support, install the two retaining screw and washer assemblies, and tighten to specification (see Specifications in this Part).
2. Connect the latch tie rod to the latch on the right track. Insert the opposite end of the rod into the hole in the adjuster handle on the left track, and then position the right track to the cushion with the anti-squeaks and spacers between the track and cushion.
3. Position the right seat track and cushion. Position the retaining nut on the upper side of the cushion frame front support, install the two retaining screw and washer assemblies, and tighten to specification (see Specifications in this Part).
4. Lift the seat and track assembly into the cab and position it so that the track studs enter their proper holes in the floor pan.
5. Install the four track-to-floor pan washers and retaining nuts, and tighten to specification (see Specification in this Part).

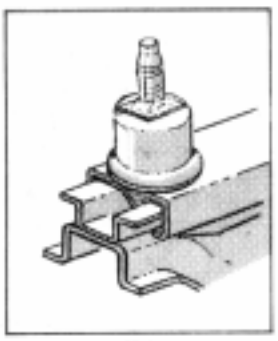

F-500 THROUGH F-750

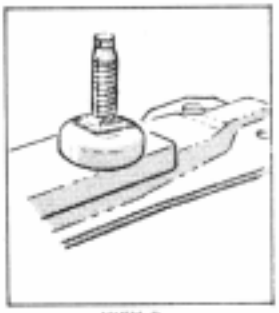

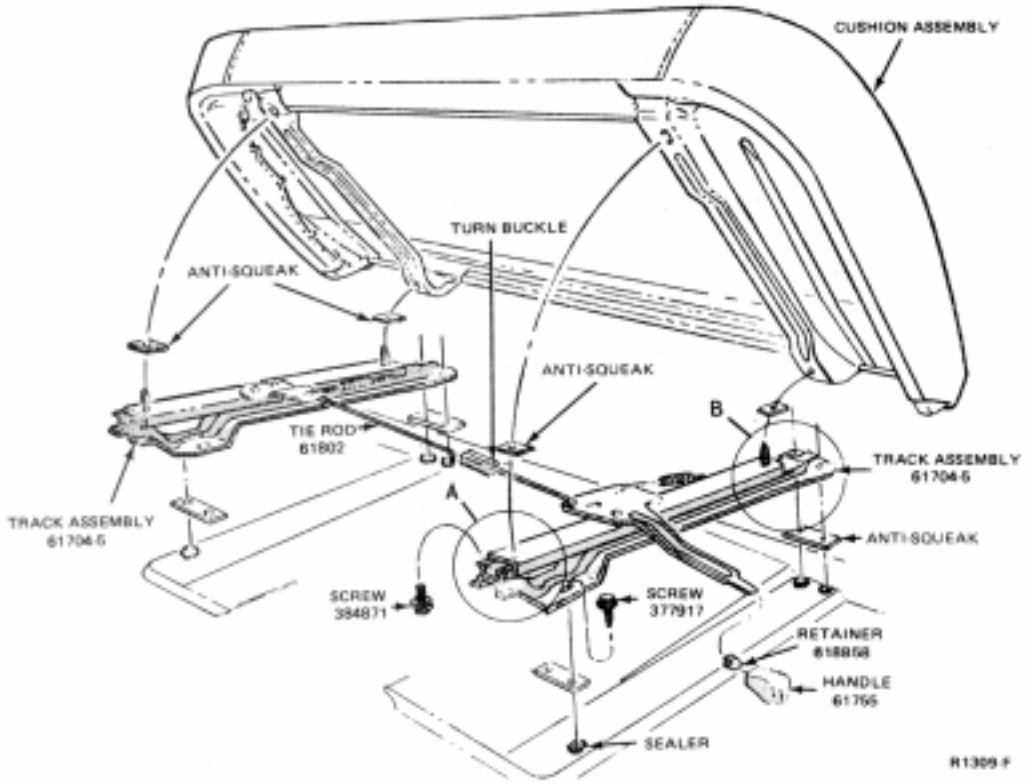

FIG. 3 Bench Seat and Track Installation—F-100 through 750 Series, Typical of L- and W-Series