PART 45-03 Door Trim Panels

REMOVAL AND INSTALLATION

DOOR-TRIM PANEL

Bronco

Since all of the interior trim panels are retained to the body panels with screws, spring clips and/or metal strips, the removal and installation procedures are obvious. Access to some of these panels, however, requires prior removal of other parts. The pertinent removal procedures are outlined as follows:

To remove the door trim panels, refer to Fig. 1. The arm rest, inside door handle and window regulator handle must be removed. Then, remove the trim panel retaining screws, spring clips, retainers and the trim panel.

Econoline

Removal

1. Remove the arm rest retaining screws and remove the arm rest from the door inner panel (Fig. 2).
2. Remove the nuts (3) from the inside door handle and remove the handle and trim cup.
3. If the vehicle is equipped with a stereo radio, remove the screws (4) retaining the speaker grille and remove the grille.
4. Remove the window regulator handle retaining screw and remove the handle, washer and spacer.
5. Remove the door trim panel by pulling the trim clips from the door inner panel with a firm steady pull on the trim panel.

Installation

1. Replace any bent or missing trim clips on the door trim panel. Position the trim panel to the door inner panel, locating the clips in the countersunk holes. Firmly push the trim panel at the clip locations to seat each clip into the holes in the door inner panel.
2. Position the inside door handle and trim cup to the door and install the retaining nuts.
3. If the vehicle is equipped with stereo radio, position the speaker grille and install the retaining screws.
4. Position the window regulator handle, washer and spacer. Install using the retainer screws.
5. Install the arm rest to the door inside panel.

L-C and W-Series

Removal

1. Remove the retaining screws and arm rest assembly if so equipped.
2. On models so equipped, remove the trim moulding assembly from the metal panel by unsnapping the retainers (Fig. 3). If equipped with a trim panel assembly, the trim panel will come off when the moulding is removed.
3. Remove the retaining screws and remove the metal panel from the door (Fig. 3).

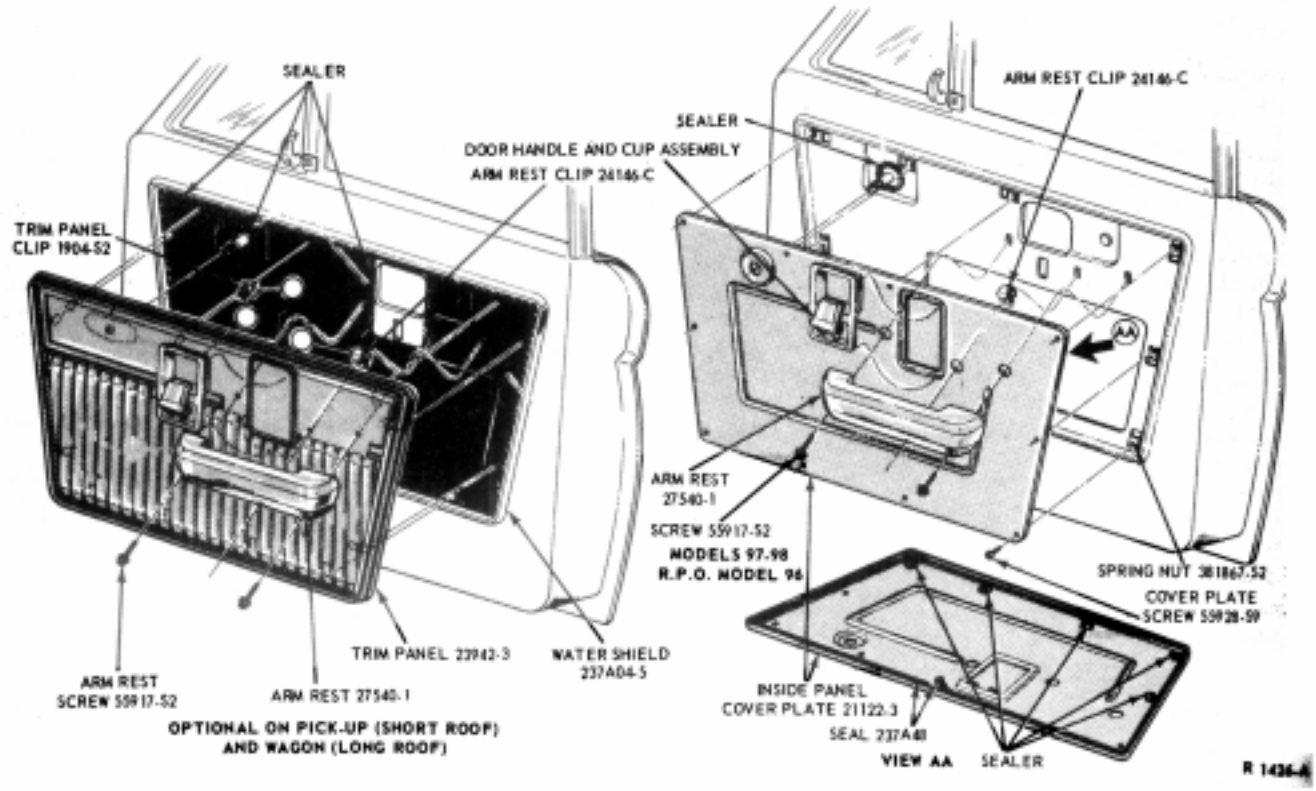

FIG. 1 Bronco Door Trim Panel Installation

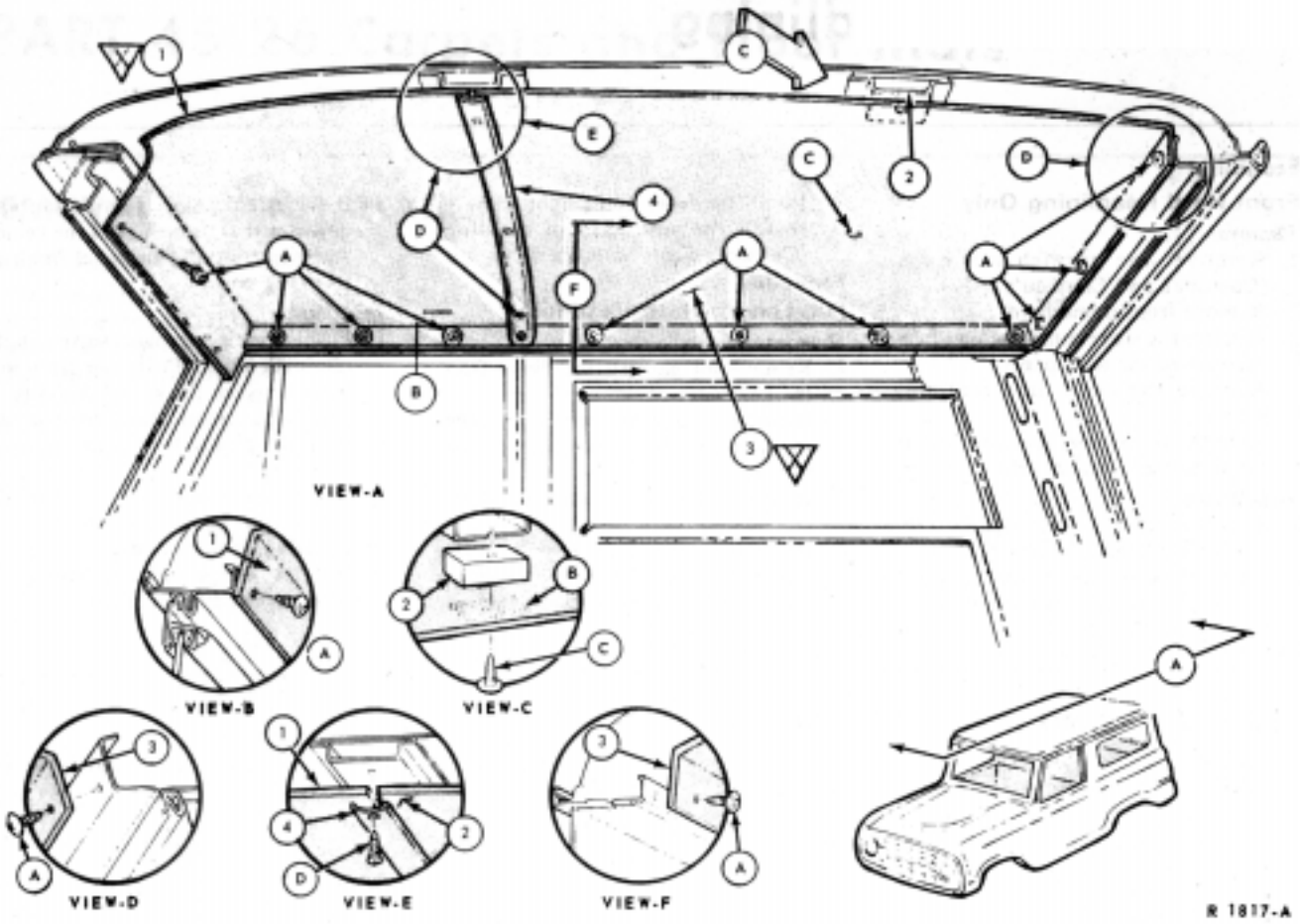

FIG. 1 Roof Trim Panel Installation—Bronco

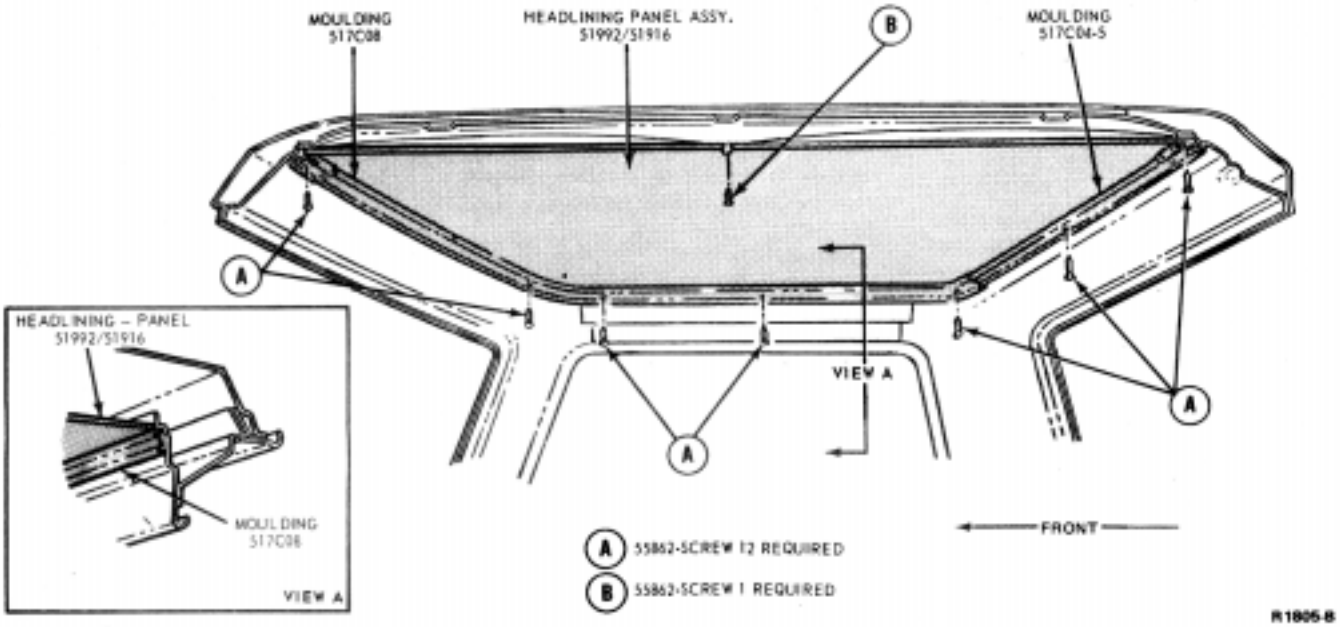

FIG. 2 Roof Trim Panel Installation—F-Series Standard Cab

screws and lock washers that secure the long roof to the cargo bed side rail and the side rail retainers (Fig. 3). Remove the retainers.

3. With the aid of a hoist or helpers, remove the long roof from the vehicle.

Installation

1. Before installing the long roof on the vehicle, inspect the weatherstrips attached to the mating surfaces of the roof side rails. Worn or damaged weatherstrips should be replaced. Inspect the mating cargo bed side rails. If they are bent or damaged, straighten and repair them as necessary.
2. Apply adhesive to the roof and weatherstrip mating surfaces.
3. Position the long roof on the vehicle making sure that the alignment dowels drop in the alignment dowel holes and the weatherstrips are in proper position.
4. Check the alignment of the roof with the door window frames, windshield frame, and tailgate. When properly aligned, install the two bolts, lock washers and nuts securing the front of the roof side panels to the body side panels, the 12 screws and lock washers securing the roof to the cargo bed side rail retainers, and the 8 screws and lock washers securing the front of the roof to the windshield frame retainers. **Apply a daub of sealer (AB-19560-A) to each attaching screw or bolt hole before installation of the screws or bolts.**

FRAME DIMENSIONS

The Bronco Frame Dimensions are shown in Fig. 4. The frame checking and repair procedures are given in Part 47-01.

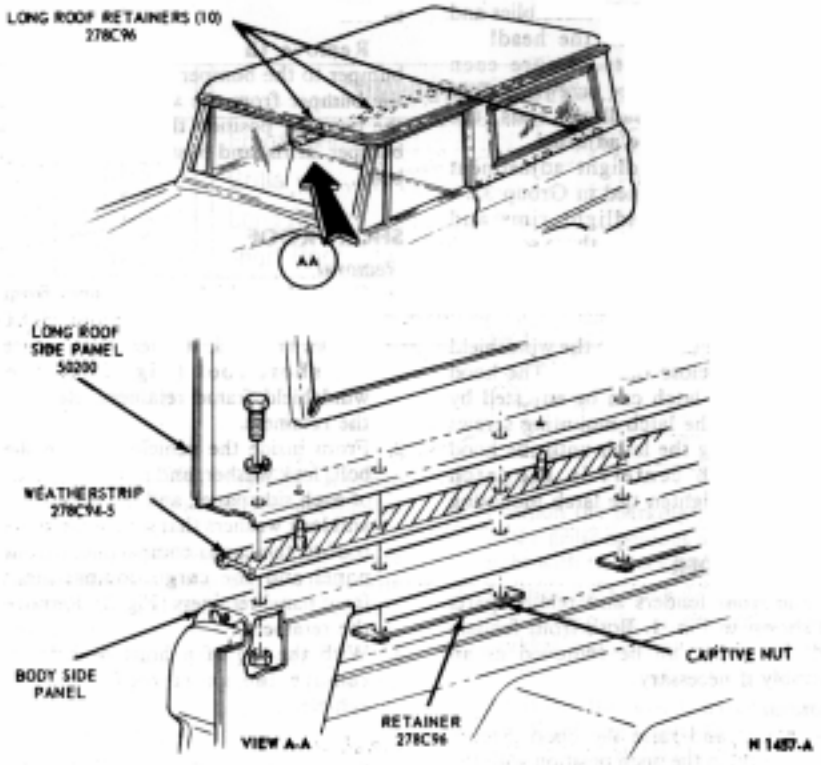

FIG. 3 Bronco Long Roof Installation

BODY SEALER

Body sealer types and application procedures are given in General Information of Part 47-01. The test procedure for locating dust and water leaks is given in Diagnosis and Testing of Part 47-01.

EXTERIOR MOULDINGS

Before removing the exterior mouldings (Fig. 5), determine by the type of retainer used if it is necessary to remove an interior trim panel. If a weld stud is distorted or broken off, it should be replaced with a screw (379560-S101).