PART 41-60 Seat Trim

Applies To All Truck Lines

COMPONENT INDEX	Page	COMPONENT INDEX	Page
GENERAL INFORMATION	60-1	REMOVAL AND INSTALLATION	60-6

GENERAL INFORMATION

SEAT TRIM

The following seat trim removal and installation procedures generally apply to all truck lines. If some of the steps do not apply to the particular vehicle being serviced, proceed to the next step and review the appropriate illustration shown.

Unless otherwise noted, the illustrations shown in this section are **typical of all bucket and bench seat assemblies.** See Figs. 1 through 6.

Seat trim replacement requires removal and installation of seat components such as seat assemblies, track assemblies and seat belts. Refer to the applicable part in Group 41 for these procedures.

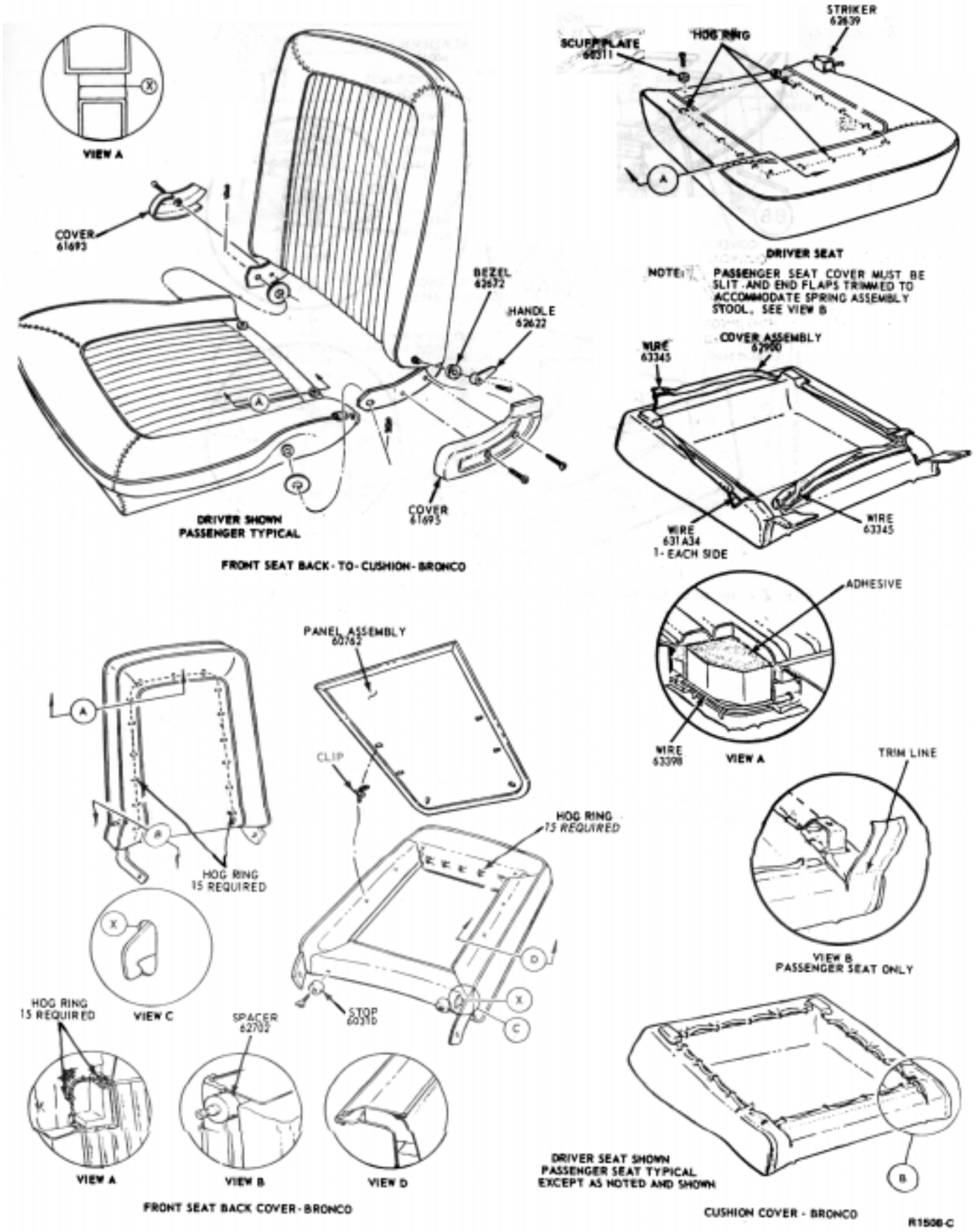

FIG. 1 Front Seat Cushion and Back Cover Installation—Bronco—Bucket Seat

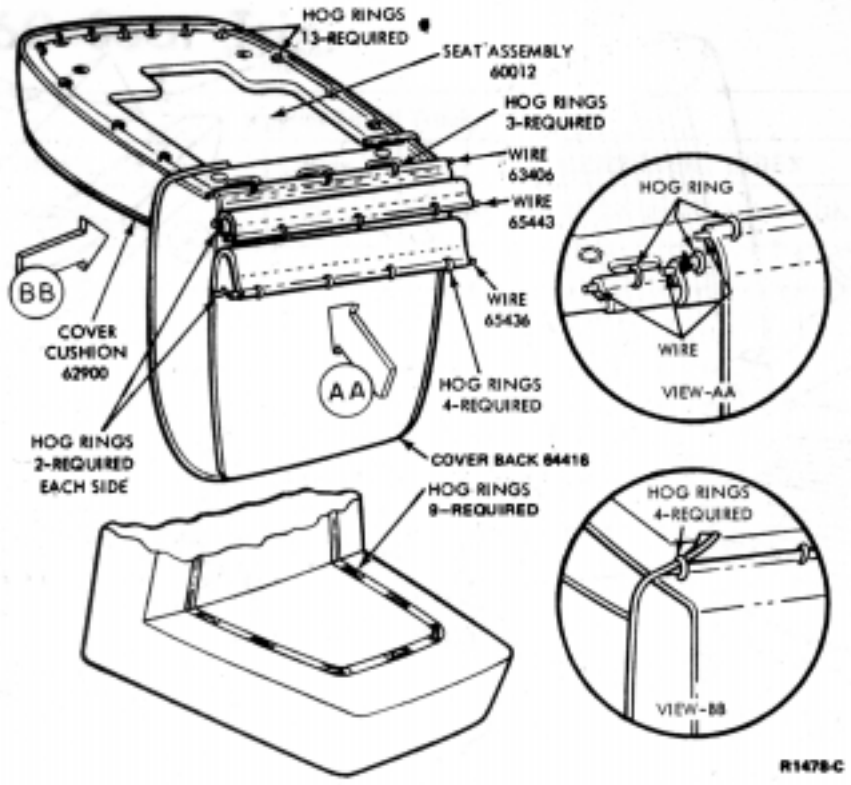

FIG. 2 Front Seat Cover Assemblies—Econoline

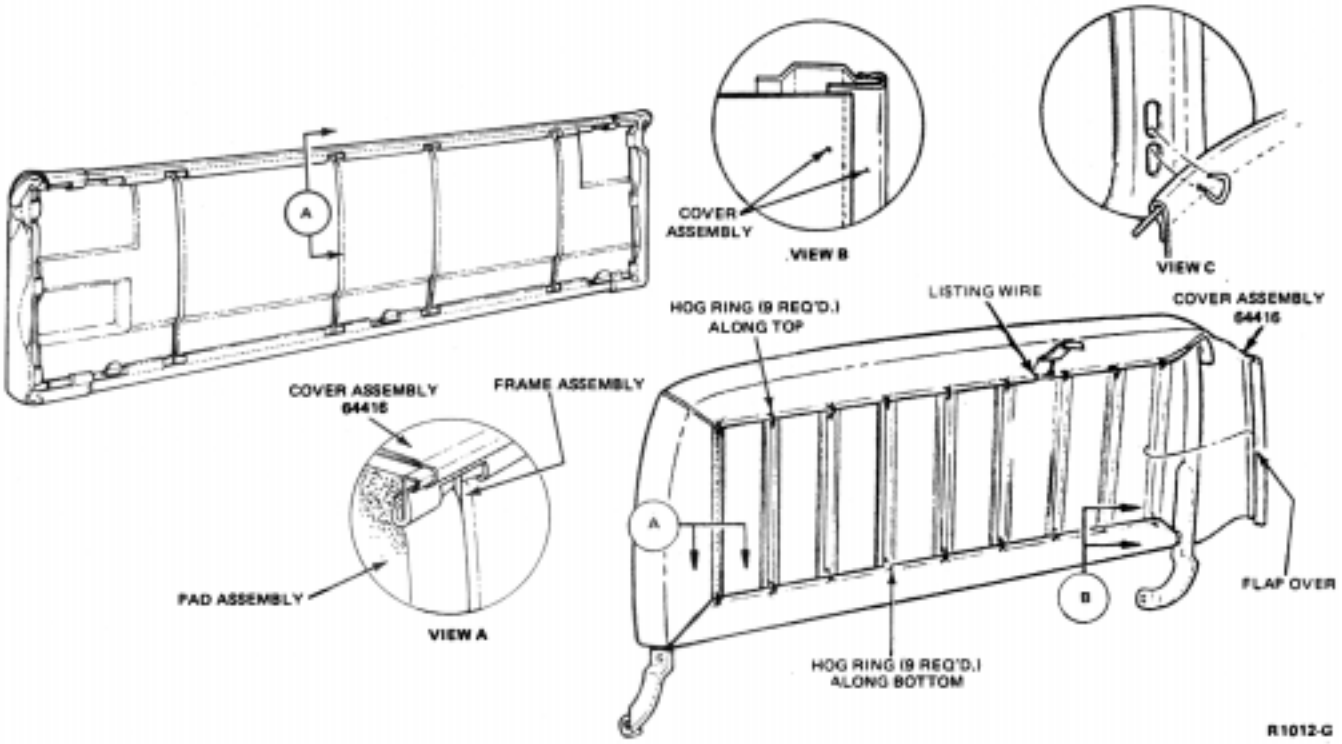

FIG. 3 Seat Back Cover Installation—Typical