PART 44-92 Liftgate, Hinges and Weatherstrip

Applies Only To Bronco

REMOVAL AND INSTALLATION

LIFTGATE

Removal

1. Unlatch the liftgate (Fig. 1), with the handle, and raise the liftgate. Using a helper to support the liftgate, remove the four screws that attach the left and right prop assemblies to the liftgate.
2. Remove the eight screws, lock washers, and nuts that secure the liftgate to the gate hinge (Fig. 1).
3. Remove the liftgate and sealer strip.

Installation

1. When replacing the liftgate assembly, transfer the glass, handle assembly, locking mechanism, and weatherstrip to the new liftgate.
2. Position the liftgate hinge on the mating body surface (Fig. 1), and secure it with eight screws, lock washers, and nuts.
3. Position the left and right prop assemblies (Fig. 1), on the liftgate and secure each prop assembly with two screws.

LIFTGATE HANDLE ASSEMBLY

Removal

1. Remove the two screws that secure the access plate (Fig. 1), on the liftgate, remove the access plate cover and disconnect the latch rods.
2. Hold the liftgate handle assembly in the unlatched position, and remove the two screws and nuts that secure the handle assembly to the liftgate.
3. Pull the handle assembly from the liftgate and remove the liftgate handle pad.

Installation

1. Position the handle pad and the handle assembly on the liftgate.
2. Turn the handle to the unlatched position. While holding the handle assembly and the pad in position, install the two screws and nuts securing the pad and the handle assembly to the liftgate and connect the latch rods.
3. Position the access plate on the liftgate and secure it with two screws.

LIFTGATE LOCK CYLINDER

Removal

1. Remove the liftgate handle from the liftgate.
2. Remove the spring retaining pin from the liftgate handle and remove the spring and washers (Fig. 1).
3. Remove the collar from the handle.
4. Depress the lock cylinder retaining pin, and remove the lock cylinder from the handle.

Installation

1. Insert the lock cylinder into the handle. Be sure the lock cylinder retaining pin is engaged in the pin hole.
2. Position the collar, spring, and washers on the handle, and install the spring retaining pin (Fig. 1).
3. Install the handle in the liftgate.

LIFTGATE LATCH BOLT ASSEMBLY

Removal

1. Open the liftgate and support the gate on the prop assemblies.
2. Remove the inside cover plate at the outside handle (Fig. 1).
3. Disconnect the latch actuating rod from the lock bracket (Fig. 1).
4. Remove the cover plate at the latch bolt.
5. Remove two screws attaching the latch bolt bracket to the liftgate, and remove the latch bolt assembly and actuating rod from the liftgate.
6. Remove the pin and remove the rod from the latch bolt (Fig. 1).

Installation

1. Position the actuating rod to the latch bolt assembly and install the pin (Fig. 1).
2. Position the latch bolt assembly and rod in the liftgate, and install the two latch bolt assembly attaching screws.
3. Install the latch bolt cover plate.
4. Connect the latch actuating rod to the lock bracket (Fig. 1).
5. Install the outside handle cover plate.

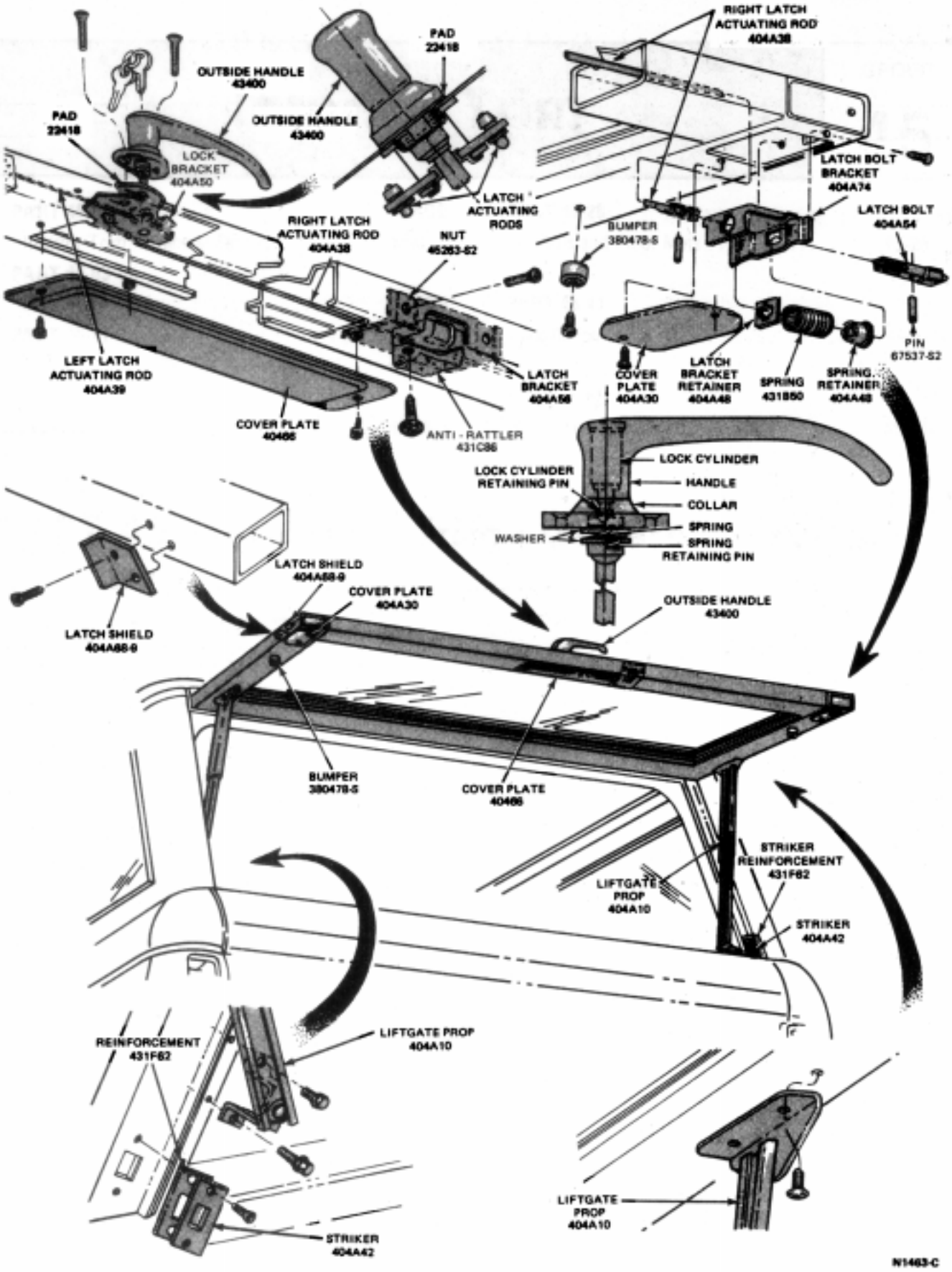

FIG. 1 Liftgate and Components