HOOD HINGE

F-and B-Series

1. Open the hood and prop it in the open position with a suitable prop.
2. Mark the locations of the hinges and remove the spring from both hinges.
3. Remove two screws attaching each hinge to the hood and remove the hood from the vehicle. Do not let the hood slide down and damage the cowl top.
4. Remove the hinge attaching bolts and remove the hinge from the vehicle.
5. Position the new hinges to the vehicle and install the attaching bolts snug.
6. Position the hood to the hinges and install the four attaching screws snug.
7. Remove the prop supporting the hood in the open position.
8. Close the hood and adjust the hood as outlined in Adjustments.

Econoline

Removal

1. Open the hood and prop it in the open position.
2. Cover the cowl area to prevent paint damage.
3. Remove two hinge-to-body attaching screws (Fig. 2).
4. Remove two hinge-to-hood attaching screws and remove the hinge.

Installation

1. Position the hinge to the hood and install the two attaching screws snug.
2. Position the hinge and shim to the body and install the two attaching screws snug.
3. Adjust the hood (Adjustments) and tighten the four hinge attaching screws.
4. Remove the protective cover and close the hood.

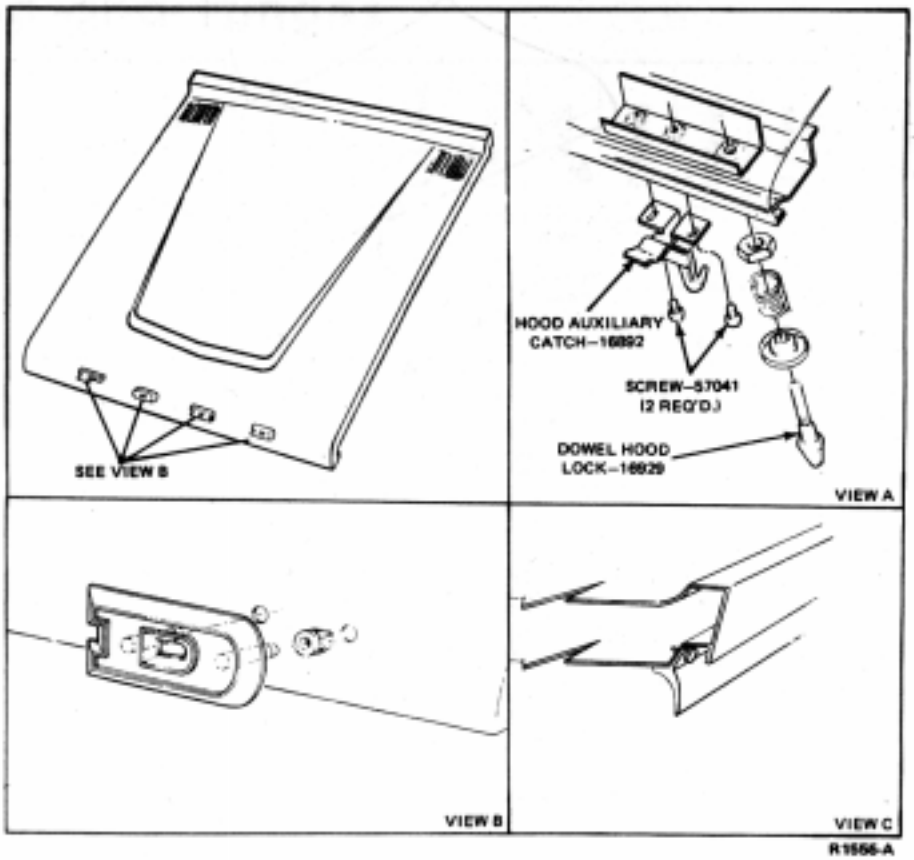

FIG. 3 Bronco Hood Installation

REMOVAL AND INSTALLATION

HOOD LATCH

F-and B-Series, Econoline and Club Wagon

1. Open the hood and remove the hood latch attaching screws and remove the latch assembly from the hood latch support brace.
2. Position the latch assembly to the hood latch support brace and install the attaching screws snug but do not tighten.
3. Adjust the latch assembly for positive engagement with the hood latch striker and tighten the latch attaching screws.

L-Series

To remove the hood latch assembly, remove the six screws which retain the latch assembly to the hood and the cowl side panel (Fig. 1). Then remove the latch.

Bronco

Removal

1. Unlatch and raise the hood. Secure the hood in the open position with the hood support rod.
2. Remove the four screws that secure the hood latch assembly to the latch bracket of the grille (Fig. 6). Remove the latch from the opening between the grille and radiator.
3. Remove the four jay nuts from the latch.

Installation

1. Position the four jay nuts on the latch.
2. Position the latch assembly on the underside of the latch bracket.
3. Secure the latch to the bracket with four screws. Do not tighten the screws.
4. Disengage the hood support rod from the hood and lower the hood to the latch. Shift the latch until the hood catch is centered with the latch opening. Tighten the screws securing the latch to its bracket and close the hood.

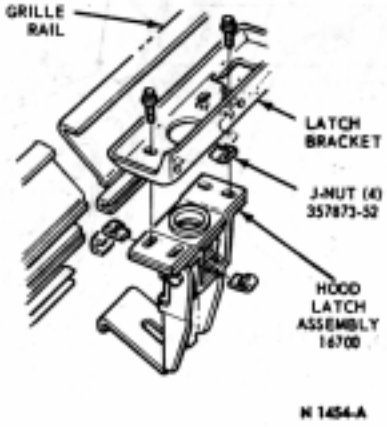

FIG. 6 Bronco Hood Latch Installation