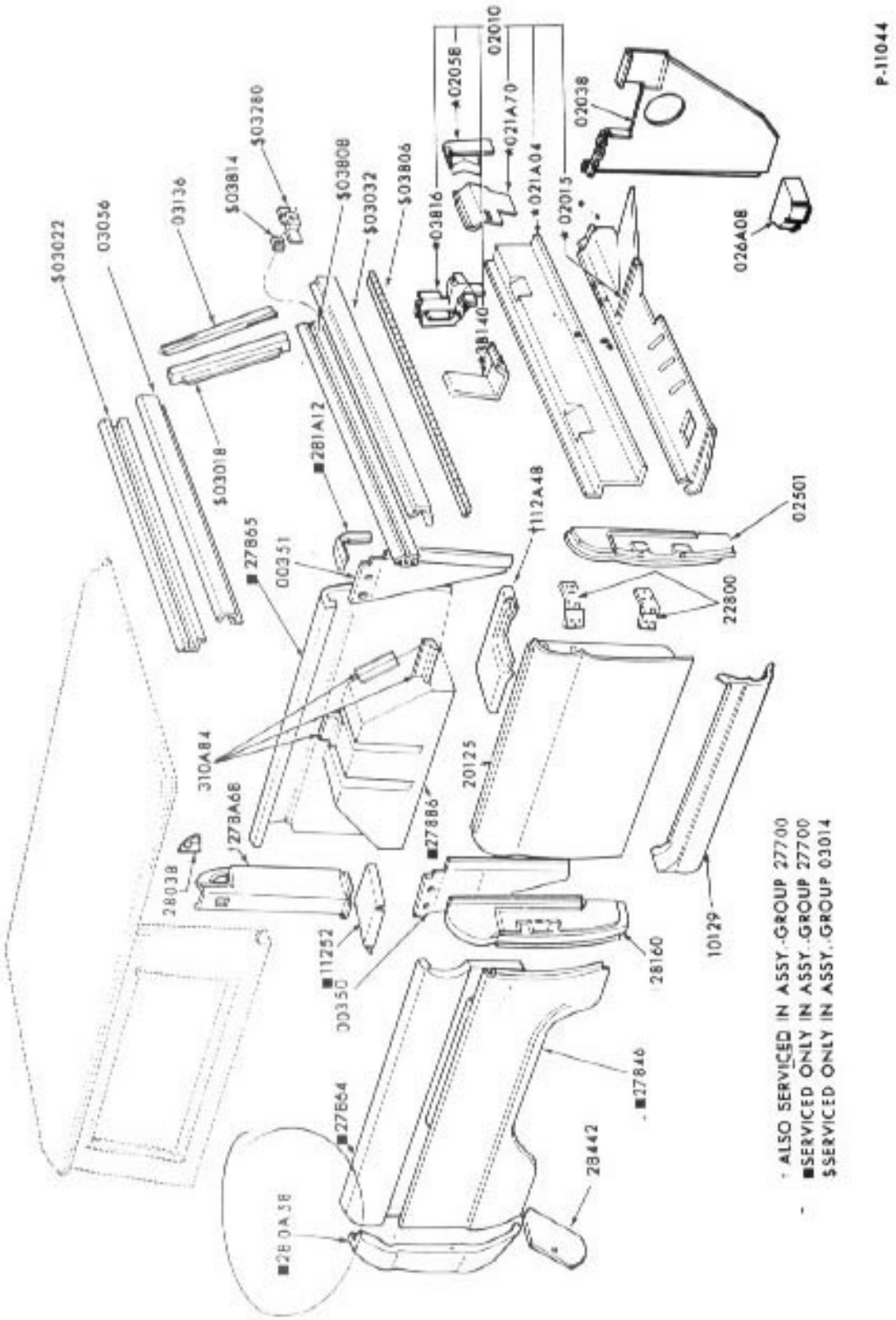

UPPER BODY
1974/77 BRONCO