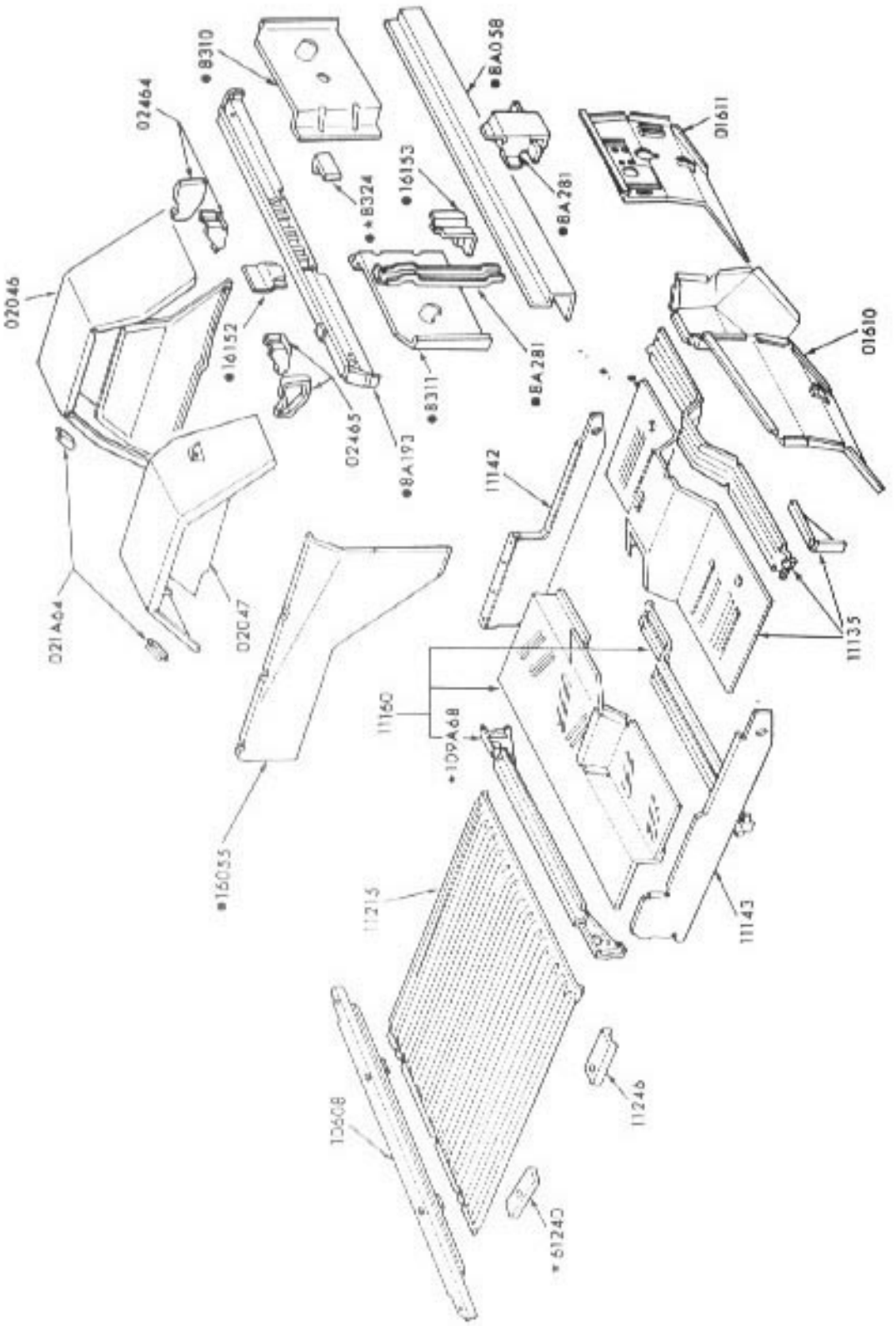

LOWER BODY
1974/77 BRONCO