Vacuum Brake Booster – Single Diaphragm — Dash-Mounted (Bendix)

PART 12-50

APPLIES TO F-100, F-150, F-250, (6200/6900 GVWR), E-100, E-150, F-150 — F-250 (4x4) AND BRONCO

SUBJECT	PAGE
DESCRIPTION	50-1
ADJUSTMENTS	
Push Rod Adjustment	50-2
REMOVAL AND INSTALLATION	
Booster	
Bronco	50-3
F-100, 150, F-250 (6200/6900 GVWR), E-100, E-150, F-150 F-250 (4x4)	50-3

DESCRIPTION

Service information for only the vacuum boosters is given here. Adjustments and repairs for the hydraulic brake systems are given in Parts 12-01 and 12-02.

The single diaphragm vacuum booster is a self-contained vacuum hydraulic power braking unit. It is a vacuum-suspended unit that uses engine intake manifold vacuum and atmospheric pressure for its power. The booster consists of three basic elements combined into a single unit as shown in Figs. 1, 2 and 3.

The three basic elements are:

1. A vacuum power chamber consisting of a front and a rear shell, diaphragm, diaphragm plate, hydraulic push rod, and vacuum diaphragm return spring.
2. A mechanically actuated control valve, integral with the vacuum power diaphragm, which controls the degree of power brake application and release in accordance with foot pressure applied to the valve operating rod through the brake pedal linkage.
3. A hydraulic dual master cylinder which supplies hydraulic pressure to the brake system.

The Bendix single diaphragm, dash-mounted booster must be replaced as a unit. The vacuum check valve is the only component which can be serviced on the booster assembly.

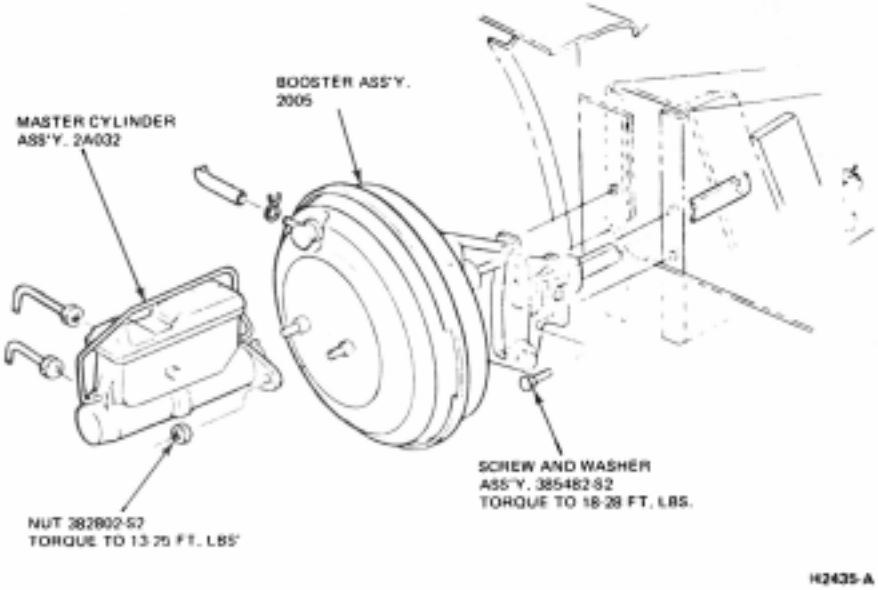

FIG. 1 F-100-250 6200/6900 GVWR Booster and Dual Master Cylinder

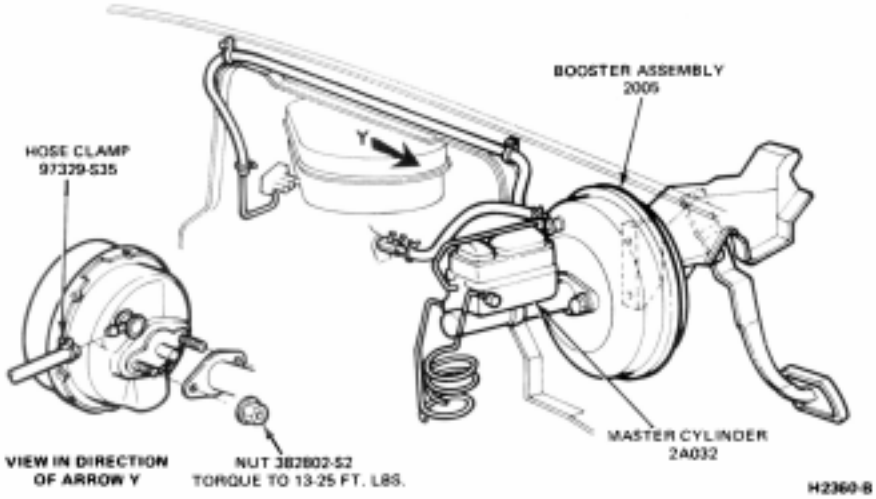

FIG. 2 E-100-E-250 Brake Booster Installation

ADJUSTMENTS

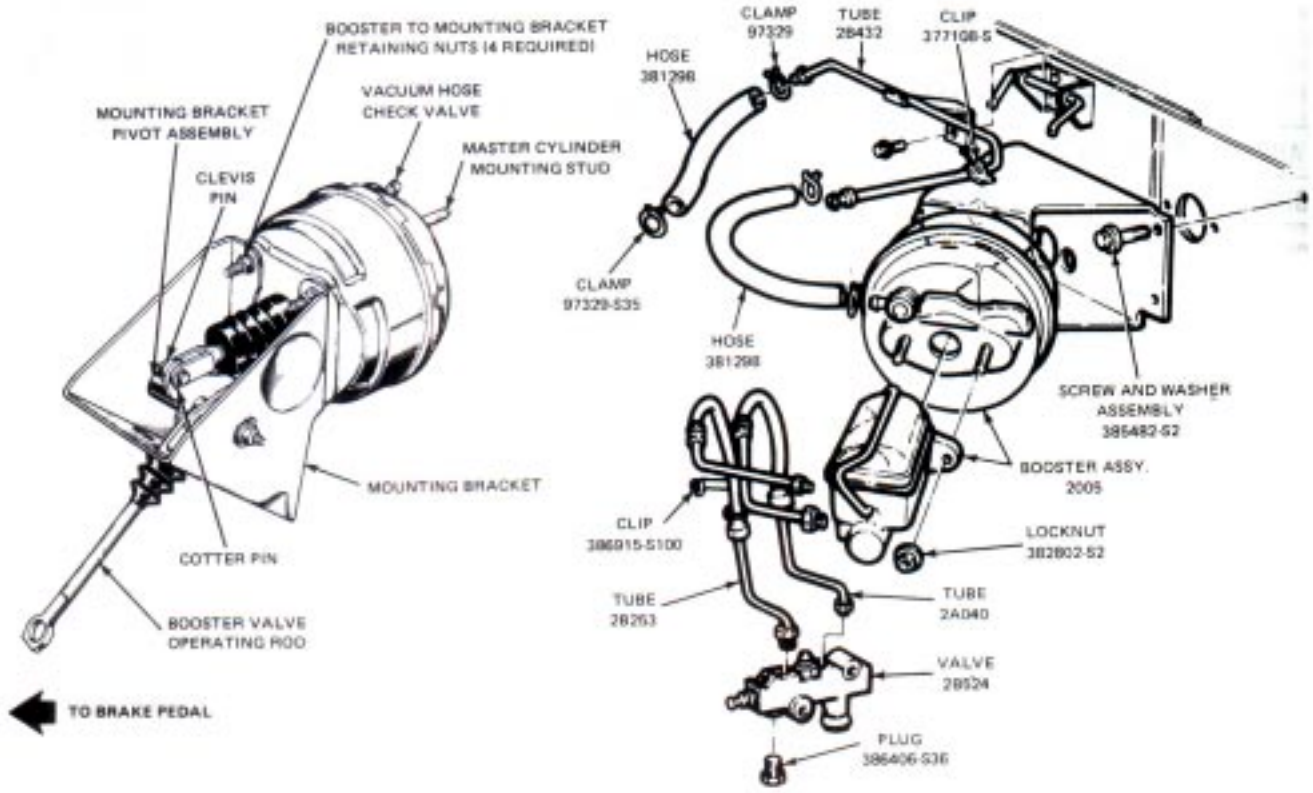

FIG. 3 Bronco Brake Booster Installation

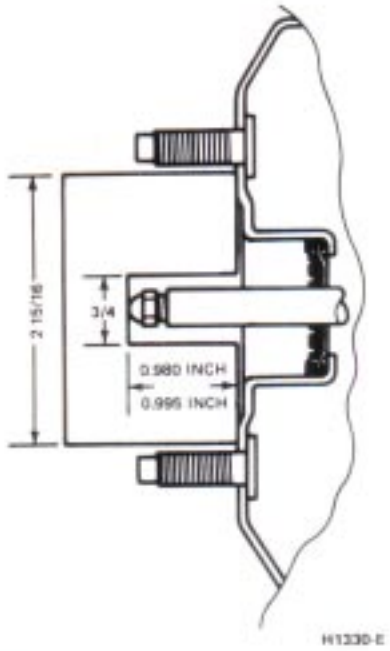

FIG. 4 Booster Push Rod Gauge Dimensions and Adjustment

PUSH ROD ADJUSTMENT

The push rod has an adjustment screw to maintain the correct relationship between the booster control valve plunger and the master cylinder piston. If the plunger is too long it will prevent the master cylinder piston from completely releasing hydraulic pressure, causing the brakes to drag. If the plunger is too short it will cause excessive pedal travel and an undesirable clunk in the booster area. Remove the master cylinder for access to the booster push rod.

To check the adjustment of the screw, fabricate a gauge and place it against the master cylinder mounting surface of the booster body as shown in Fig. 4. Adjust the push rod screw by turning it until the end of the screw just touches the inner edge of the slot in the gauge.

REMOVAL AND INSTALLATION

BOOSTER

F-100, 150, F-250, 6200/6900 GVWR, E-100, E-150-F-150-F-250 (4x4)

Note: Make sure that the booster rubber reaction disc is properly installed as shown in Fig. 5 if the master cylinder push rod is removed or accidentally pulled out. A dislodged disc may cause excessive pedal travel and extreme operation sensitivity. The disc is black compared to the silver colored valve plunger that will be exposed after the push rod and front seal is removed. The booster unit is serviced as an assembly and must be replaced if the reaction disc cannot be properly installed and aligned, or if it cannot be located within the unit itself.

Removal

1. Disconnect the stop lamp switch wiring to prevent running the battery down.
2. Support the master cylinder from the underside with a prop.
3. Remove the master cylinder-to-booster retaining nuts.
4. Loosen the clamp that secures the manifold vacuum hose to the booster, and remove the hose.
5. Pull the master cylinder off the booster and leave it supported by the prop, far enough away to allow removal of the booster assembly.
6. From inside the cab on vehicles equipped with push rod mounted stop lamp switch, remove the retaining pin and slide the stop lamp switch, push rod, spacers and bushing off the brake pedal arm. On vehicles equipped with brake pedal mounted stop lamp switch remove the attaching bolt, nut and plastic bushing, and disconnect the booster push rod from the brake pedal. On the Bronco, remove the nuts that hold the booster assembly to the dash panel.
7. From the engine compartment on the F-Series remove the bolts that attach the booster to the dash panel. On the Bronco, the nuts on the inside of the cab must be held while removing the booster mounting bolts.

Installation

1. Mount the booster assembly on the engine side of the dash panel by sliding the bracket mounting bolts and valve operating rod in through the holes in the dash panel. Note: Make certain that the booster push rod is positioned on the correct side of the master cylinder to install onto the push pin prior to tightening the booster assembly to the dash.
2. From inside the cab on Econoline and Bronco, install the booster mounting bracket-to-dash panel retaining nuts.
3. Position the master cylinder on the booster assembly, install the retaining nuts, and remove the prop from underneath the master cylinder.
4. Connect the manifold vacuum hose to the booster and secure with the clamp.
5. From inside the cab on vehicles equipped with push rod mounted stop lamp switch, install the bushing and position the switch on the end of the push rod. Then install the switch and rod on the pedal arm, along with spacers on each side, and secure with the retaining pin. On vehicles equipped with pedal mounted stop lamp switch, connect the booster valve operating rod to the brake pedal with the attaching bolt, nut and plastic bushing.
6. Connect the stop lamp switch wiring.
7. Start the engine and check brake operation.

Bronco

Removal

1. From the underside, support the master cylinder with a suitable prop.
2. Remove the master cylinder-to-booster retaining nuts.
3. Loosen the clamp securing the manifold vacuum hose to the booster and remove the hose, Fig. 3.
4. Pull the master cylinder from the booster far enough to allow booster assembly removal and support it on the prop.
5. Remove the cotter pin from the clevis pin and remove the clevis pin from the booster-to-mounting bracket pivot assembly.
6. Remove the nuts holding the booster assembly to the mounting bracket and remove the booster assembly.

Installation

1. Position the booster to the mounting bracket and install the retaining nuts.
2. Install the clevis pin and cotter pin at the mounting bracket pivot.
3. Position the master cylinder to the booster and install the retaining nuts.
4. Connect the vacuum hose at the booster.
5. Start the engine and check brake operation.