PART 6-2 FOUR WHEEL DRIVE TRANSFER CASE

Section	Page
1 Description and Operation	6-2
Power Flow—Neutral Position	6-2
Power Flow—4 L Position (Low Gear, All Wheels)	6-2
Power Flow—2 H Position (High Gear, Rear Wheels)	6-2
Power Flow—4 H Position (High Gear, All Wheels)	6-2
2 Removal and Installation	6-3
Removal	6-3
Installation	6-3
3 Major Repair Operations	6-4
Disassembly	6-4
Parts Repair or Replacement	6-5
Assembly	6-7

1 DESCRIPTION AND OPERATION

A manually-shifted 2-speed transfer case in the 4-wheel drive Bronco controls the power from the engine and transmission to the front and rear driving axles (Fig. 6-2). The transfer case shift lever positions, from front to rear, are 4L (low gear, all wheels), N (Neutral), 2H (high gear, rear wheels), and 4H (high gear, all wheels).

POWER FLOW—NEUTRAL POSITION

When the transfer case gears are in neutral (Fig. 6-2), power from the front main transmission drives the transfer case input shaft and drive gear. The drive gear drives the idler shaft and the high speed gear that free-runs on the front output shaft. Therefore, no power can be delivered to either the front, or rear axle, even when the front main transmission is in gear.

POWER FLOW—4L POSITION (LOW GEAR, ALL WHEELS)

When the transfer case shift lever is shifted into the 4-wheel low position, it pushes the two sliding gears back into engagement with the idler shaft low-speed gear teeth.

The power flows from the main drive gear to the idler drive gear and shaft, and to the idler low-speed gear. From the low-speed, the power flows through the two sliding gears to their respective output shafts to give speed reduction.

POWER FLOW—2H POSITION (HIGH GEAR, REAR WHEELS)

When the transfer case shift lever is shifted into the 2-wheel high position, the two sliding gears are pulled forward out of engagement from the idler shaft low-speed gear, leaving the front output sliding gear in neutral and pulling the rear output sliding gear farther forward into engagement with the clutch teeth of the main drive gear. This locks the main input shaft directly to the rear wheel output shaft.

The power flows directly from the transmission to the rear axle without any reduction of speed.

The front output sliding gear remains in a neutral position, the idler shaft drive gear turns the high-speed gear free on the front output shaft, and there is no power to the front axle.

POWER FLOW—4H POSITION (HIGH GEAR, ALL WHEELS)

When the transfer case shift lever is shifted into the 4-wheel high position, it pulls the rear output and front output sliding gears forward into engagement with the clutch teeth of the

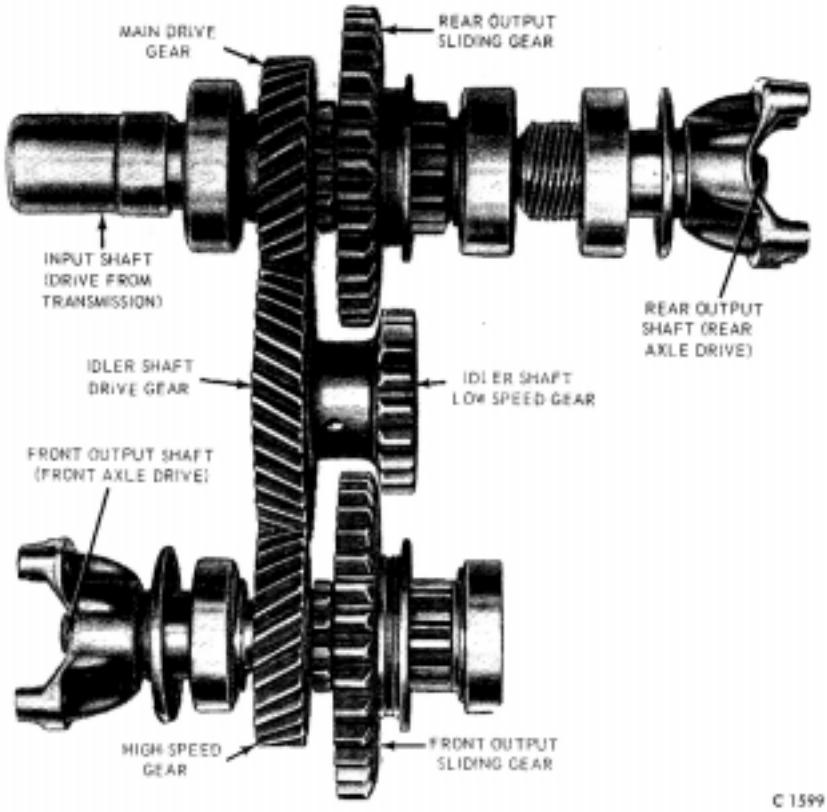

FIG. 6-2—Transfer Case Gear Train in Neutral

main drive gears. This locks the rear output shaft directly to the main input shaft, and the front output shaft to the high-speed idler shaft gear.

The power from the transmission flows from the drive gear in two directions. Direct drive to the rear axle flows through the rear output shaft. Direct drive to the front axle flows through the idler shaft drive gear, high-speed gear, and front output shaft.

2 REMOVAL AND INSTALLATION

REMOVAL

1. Raise the vehicle on a hoist.
2. Support the transfer case shield with a jack and remove the bolts that attach the shield to the frame side rails. Remove the shield.
3. Drain the transmission and transfer case lubricant.
4. Disconnect the front and rear drive shafts at the transfer case (Fig. 6-3).
5. Disconnect the speedometer cable at the transfer case.
6. Disconnect the shift rods from the transmission shift levers. Then, place the first-reverse gear shift lever into the first gear position, and insert the fabricated tool (Fig. 6-3). This tool will prevent the input shaft roller bearings from dropping into the transmission case when separating the transfer case from the transmission and output shaft.
7. Cut the lock wire and remove the two bolts, washers, plates, and insulators that secure the crossmember to the transfer case adapter.
8. Remove the crossmember-to-frame side support attaching bolts.
9. Raise the transmission and remove the upper insulators from the crossmember. Remove the crossmember.
10. Disconnect the shift rod from the transfer case shift lever bracket.
11. Remove the bolt that attaches the shift lever bracket to the transfer case adapter, and allow the assembly to hang by the shift lever.
12. Secure the transfer case to a transmission jack, and remove the transfer case-to-transmission attaching bolts.
13. Move the transfer case and jack rearward until it clears the transmission output shaft (Fig. 6-3). Lower the transfer case.

INSTALLATION

1. Position the transfer case to the transmission (Fig. 6-3) and install the attaching bolts. Torque the bolts to specifications.
2. Position the shift lever to the transfer case adapter, and install the attaching bolt.
3. Connect the shift rod to the shift lever bracket and secure with the spring washer, flat washer, and cotter pin.
4. Raise the transmission and transfer case high enough to provide clearance for installing the crossmember. Position the upper insulators to the crossmember and install the crossmember-to-frame side support attaching bolts.
5. Align the bolt holes in the transfer case adapter with those in the crossmember, then lower the transmission and remove the jack.
6. Install the crossmember-to-transfer case adapter bolts, insulators, plates, and washers. Secure the bolts with lock wire.
7. Remove the fabricated tool, and connect each shift rod to its respective lever on the transmission with a spring washer, flat washer, and cotter pin.
8. Connect the speedometer cable.
9. Install the rear axle drive shaft to the transfer case, and torque the attaching bolts to specifications.
10. Install the front wheel drive shaft to the transfer case, and torque the attaching bolts to specifications.
11. Fill the transmission and transfer case to the proper levels with the recommended lubricant.
12. Position the transfer case shield to the frame side rails, and install the attaching bolts.

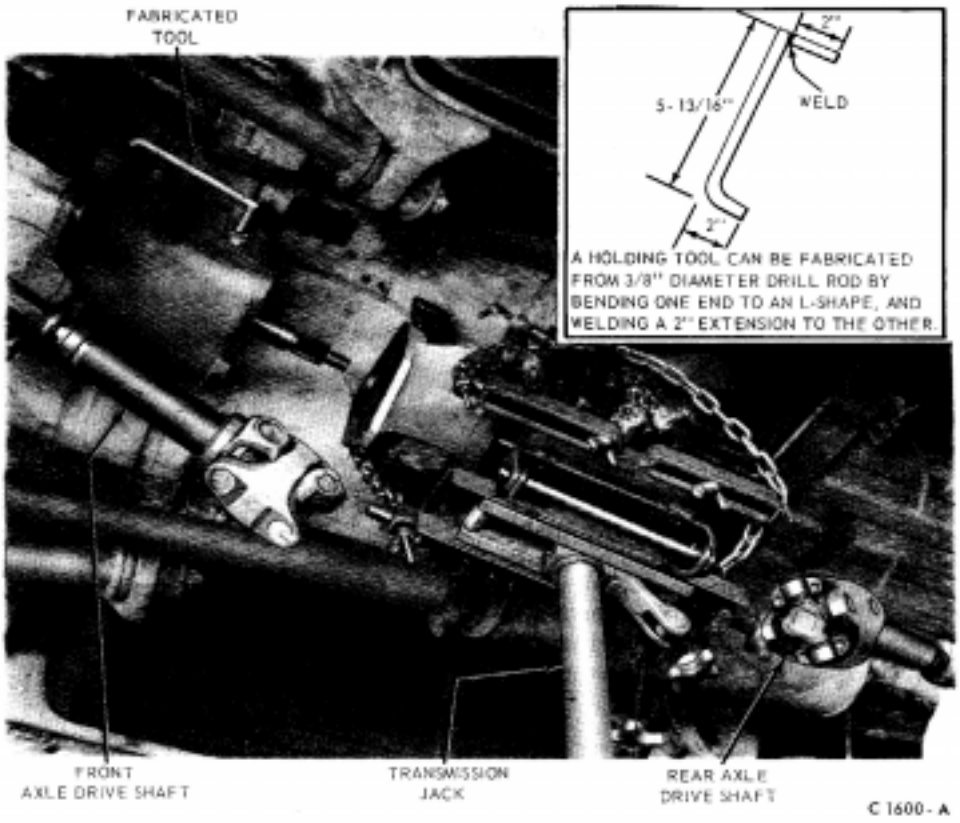

FIG. 6-3—Removing or Installing Transfer Case

3 MAJOR REPAIR OPERATIONS

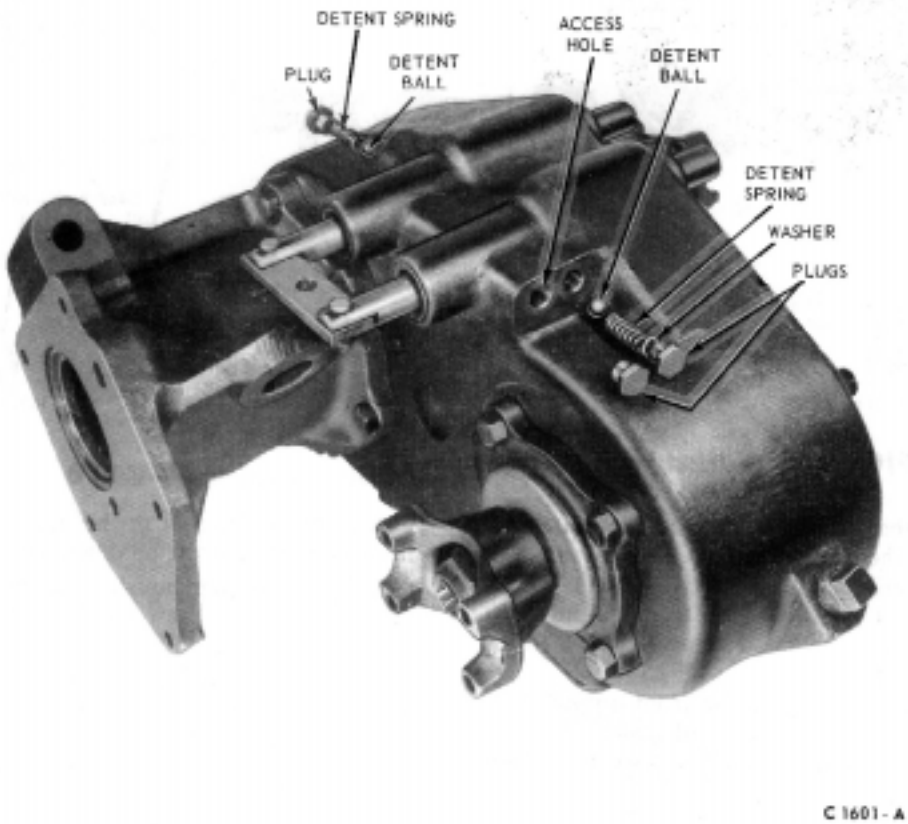

FIG. 6-4—Front and Rear Drive Shift Rail Detent Balls, Springs and Plugs

DISASSEMBLY

1. Clean the dirt from the transfer case, and remove the bottom cover plate.

2. Remove the retaining plug, flat washer, detent spring, and ball that engages the front drive shift rail detent rod. Then, remove the plug from the front drive detent rod access hole (Fig. 6-4).

3. Remove the retaining plug, detent spring, and ball that engages the rear drive shift rail detent rod (Fig. 6-4).

4. Remove the idler shaft lock plate

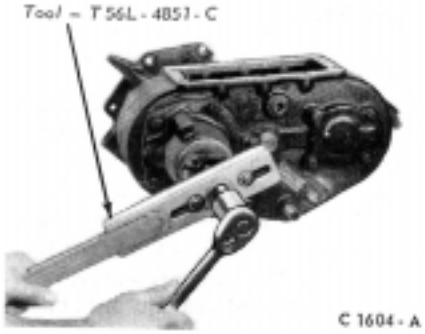

FIG. 6-7—Removing Flange

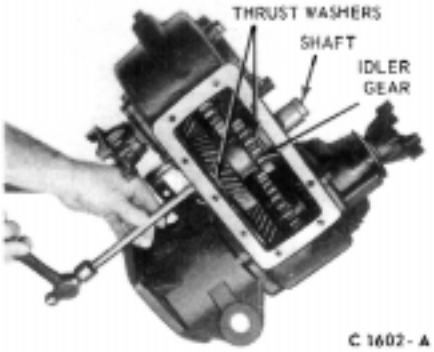

FIG. 6-5—Removing Idler Shaft

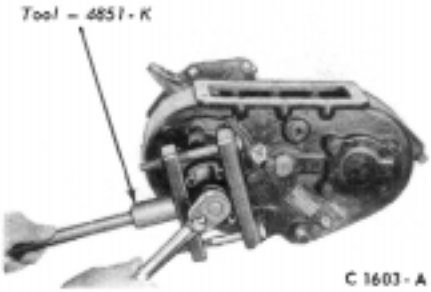

FIG. 6-6—Removing or Installing Flange Retaining Nut

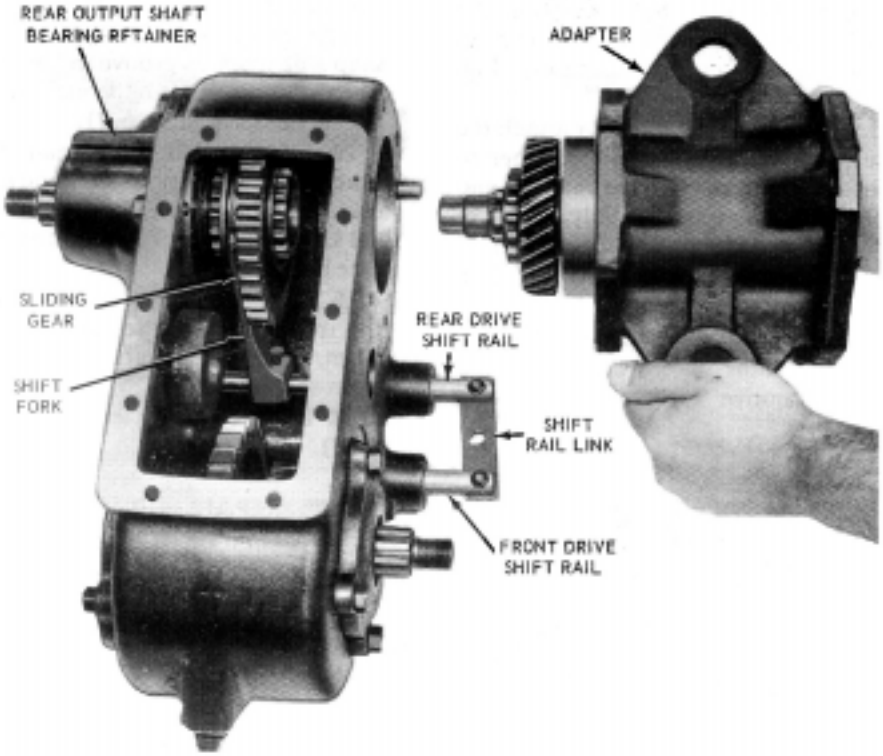

FIG. 6-8—Removing or Installing Adapter Housing

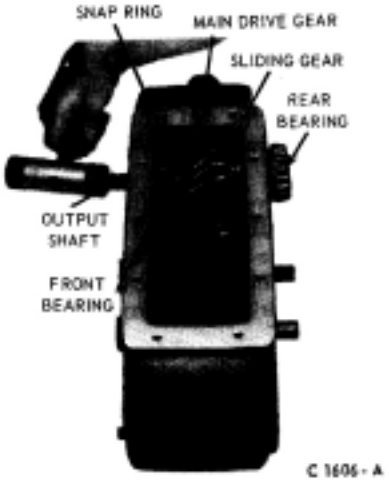

FIG. 6-9—Removing Front Output Shaft

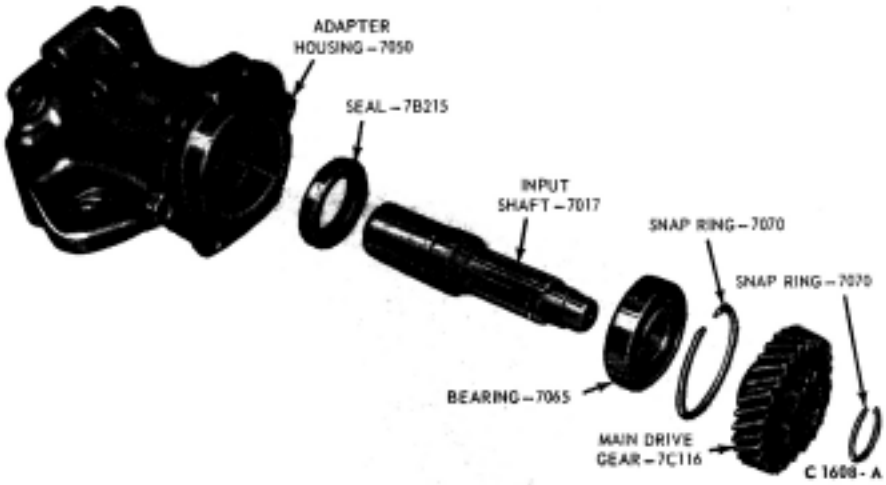

FIG. 6-11—Input Shaft—Disassembled

from the rear of the case.

5. Using a hammer and soft drift, drive the idler shaft rearward and out of the case. Then, lift the thrust washers and idler gear from the case (Fig. 6-5). **When removing the idler gear, do not lose any of the rollers.**

6. Remove the flange retaining nuts from the front and rear output shafts (Fig. 6-6).

7. Remove the flange from the front and rear output shafts (Fig. 6-7). Discard the front flange O-ring.

8. Remove the bolts securing the adapter housing to the case and remove the adapter as an assembly (Fig. 6-8).

9. Remove the bolts that attach the rear output shaft bearing retainer to the case, and remove the retainer and output shaft as an assembly. **Be careful not to lose any of the rollers.**

10. Disconnect the shift rail link from the two shift rails.

11. Lift the rear output shaft sliding gear from the case (Fig. 6-8).

12. Remove the set screw securing the rear shift fork to the shift rail. Then, remove the rear drive shift rail and fork from the case (Fig. 6-8).

13. Remove the front output shaft rear cover and shims. Tie the shims together.

14. Remove the front output shaft bearing retainer and gasket. Remove the retainer seal if it is worn or damaged.

15. Tap the threaded end of the front output shaft to remove the rear cup from the case bore.

16. Wedge the front output shaft front bearing away from the main drive gear to allow removal of the snap ring from its groove in the shaft. Then, tap the shaft and rear bearing out of the case (Fig. 6-9).

17. Lift the sliding gear, main drive gear, front bearing, spacer, and snap ring from the case.

18. Remove the front cup from the case bore.

19. Remove the set screw securing the front shift fork to the shift rail. Then, remove the shift rail and fork from the case.

20. Remove the detent rods (Fig. 6-10).

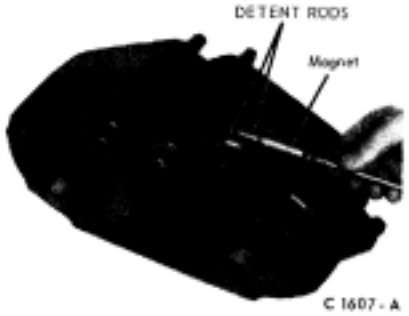

FIG. 6-10—Removing Detent Rods

PARTS REPAIR OR REPLACEMENT

INPUT SHAFT

1. Remove the snap ring from the front of the shaft (Fig. 6-11).

2. Place the adapter housing and input shaft on a press, and press the shaft out of the main drive gear and housing.

3. Remove the bearing retaining snap ring from the housing bore, and remove the bearing.

4. Remove the seal in the adapter housing if it is worn or damaged.

5. If the adapter housing seal was removed, install a new seal with the tool shown in Fig. 6-12.

6. Place the bearing in the housing and secure with the snap ring.

7. Using the main drive gear as a base, press the input shaft through the housing, seal, bearing, and main drive gear. Install the snap ring on

FIG. 6-12—Installing Adapter Housing Seal

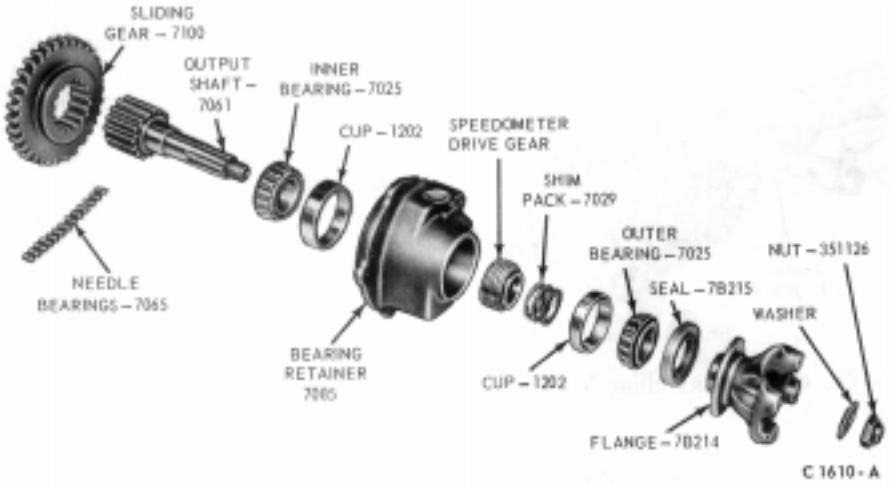

FIG. 6-13—Rear Drive Output Shaft—Disassembled

the front of the shaft.

REAR DRIVE OUTPUT SHAFT

1. Remove the needle bearings from the bore of the shaft (Fig. 6-13).
2. Remove the speedometer driven gear from the bearing retainer housing.
3. Place the bearing retainer and rear output shaft assembly in a press, and press the shaft out of the retainer.
4. Lift the speedometer drive gear and shims from the shaft (Fig. 6-13). Tie the shims together.
5. Press the outer cup, bearing and seal from the bearing retainer as shown in Fig. 6-14.
6. Remove the inner cup with the tool shown in Fig. 6-14.
7. Remove the inner bearing from the output shaft with the tool shown in Fig. 6-15.
8. Press the shaft onto the inner bearing with the tool shown in Fig. 6-15.
9. Install the outer cup in the bearing retainer with tool T55P-4616-A1.
10. Install the inner cup with tool T56T-4616-A2.
11. Position the outer bearing into the bearing retainer. Then, place the shims and speedometer drive gear on the output shaft, and install the shaft in the bearing retainer housing.
12. Place the bearing retainer and shaft in a vise. Install the output shaft flange and torque the retaining nut to specifications. Install a dial indicator on the flange end of the output shaft, and check the end play. The end play should be 0.003-0.005 inch. If not within these limits, adjust the shim pack (Fig. 6-13) between the speedometer drive gear and rear output shaft outer bearing.
13. After establishing the correct end play, remove the output shaft flange and press the bearing retainer seal in the housing with tool T56T-4616-A. Install the speedometer driven gear.

FRONT DRIVE OUTPUT SHAFT

1. To remove the front output shaft rear bearing, use the sliding gear as a base and press the bearing from the shaft.
2. Install the bearing as shown in Fig. 6-16.

SHIFT RAIL OIL SEALS

1. Remove the shift rail seals as shown in Fig. 6-17.
2. Install the two shift rail oil seals, using the tool shown in Fig. 6-18.

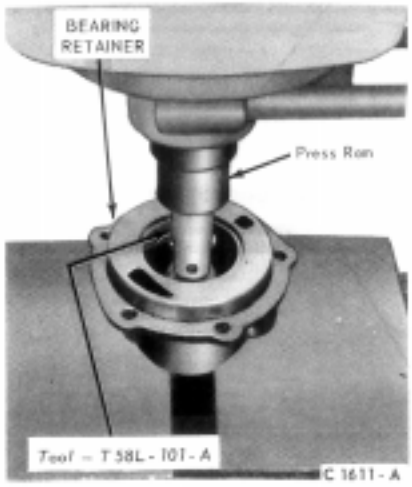

FIG. 6-14—Removing Rear Bearing Retainer Outer Cup, Bearing and Seal

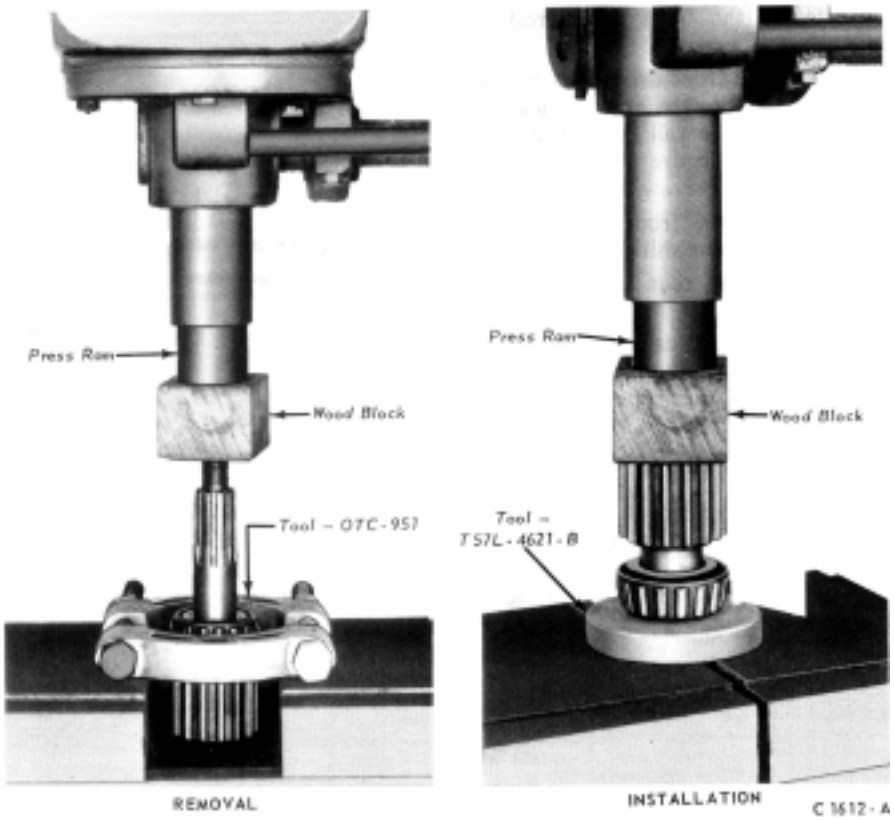

FIG. 6-15—Replacing Output Shaft Inner Bearing

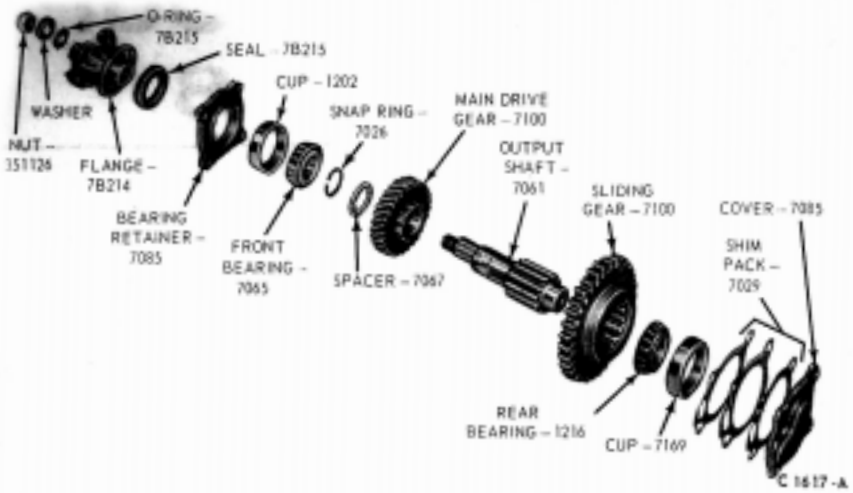

FIG. 6-20—Front Output Shaft—Disassembled

washers. **After installing the idler shaft, tap the sides of the case to relieve tension from the case.** Install the idler shaft lock plate.

18. Secure the shift rail link to the two shift rails.

19. Install the front and rear drive shift rail detent balls, springs, and retaining plugs. **Be sure that the heavier loaded spring and flat washer are installed in the front drive shift rail.** Install the rod access hole plug.

20. Install the flange, washer, and retaining nut on each of the output shafts, using the tool shown in Fig. 6-6. **Be sure to install a new O-ring in the front output shaft flange.** Torque the retaining nuts to specifications.

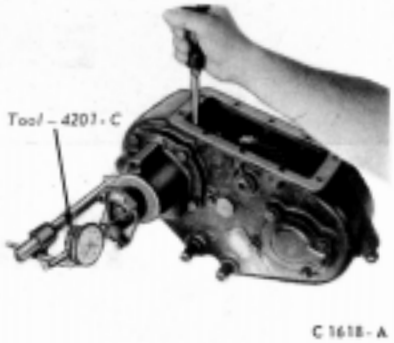

FIG. 6-21—Checking Front Drive Output Shaft End Play

21. Install a dial indicator on the front drive output shaft and check the end play as shown in Fig. 6-21. The end play should be 0.003-0.005 inch. If not within these limits, adjust the shim pack at the front output shaft rear cover.

22. Position the cover plate to the case and install the attaching bolts.