Front Driving Axle — 44-IF Dana

PART 15-30

APPLIES TO BRONCO ONLY

SUBJECT	PAGE
DESCRIPTION AND OPERATION	
Dana Design Front Four-Wheel Drive Axle	30-1
Front-Wheel Drive Free Running Hub	30-1
OPERATION	
Free Running Position	30-1
Lock Position	30-1
REMOVAL AND INSTALLATION	
Dana Four-Wheel Drive Front Axle	30-6
Drive Pinion Oil Seal	30-6
Front Axle Shaft and Steering Knuckle	30-4
DISASSEMBLY AND ASSEMBLY	
Conventional Differential	30-7
Depth Gauge Check	30-8
Differential Bearing End Play Measurement	30-7
Differential Bearing Preload and Ring Gear Backlash Adjustment	30-10
Drive Pinion Installation and Depth Adjustment	30-8
SPECIFICATIONS	30-11

DESCRIPTION AND OPERATION

DANA DESIGN FRONT FOUR-WHEEL DRIVE AXLE

An open-yoke design axle is used with the yoke welded to the outer ends of the axle housing. Power to drive the front wheels is transmitted through open Carden-type U-joints. Sealed ball and socket joints are used as knuckle joints. The spindle bore seal is installed on the axle shaft rather than being retained in the spindle. Due to its special design, the seal acts as a slinger as well as a seal (see Fig. 1 and 3).

The differential section of the Dana Model 44-1F axle is similar in design to the other Dana units used on Ford vehicles (Fig. 2). The differential carrier is integral with the axle housing. Adjustment of the side carrier bearings is accomplished by means of shims placed between the bearings and the differential case. The carrier side bearings are preloaded by the squeezing action of the housing. A spreader must be used (Fig. 12) on the axle housing to relieve the tension on the differential bearings and permit removal or installation of the differential. Pinion depth is controlled by a shim pack located to the rear of the pinion bearing. Pinion bearing preload is controlled by variable-sized shims. Where necessary, special tools are available to service the Dana axle used in the Bronco.

The front axle is of the integral carrier-housing, hypoid-gear type, in which the centerline of the drive pinion is mounted below the centerline of the ring gear.

The integral pinion gear and shaft is supported by two opposed tapered roller bearings which are assembled in the side of the carrier housing. Pinion locating shims, installed between the bearing cup and the cup seat, control the drive pinion depth adjustment. The pinion bearing preload is controlled by shims located between the pinion bearing and the shoulder on the drive pinion shaft.

The differential case assembly is supported by two opposed tapered roller (side) bearings and cups, which are retained in the housing by removable caps. Shims, installed between each differential side bearing and the shoulder on the case, perform three functions: they take up the differential case side clearance; they adjust the backlash between ring gear and pinion, and they establish differential side bearing preload.

A cover on the front of the carrier housing provides access for inspection, removal and installation of the differential assembly and drive pinion. A metal tag, stamped with the gear ratio and part number is secured to the housing by one of the cover bolts (Fig. 2 Part 15-01).

FRONT-WHEEL DRIVE FREE RUNNING HUB

The free-running hub is optional equipment for the Dana front axle of the Bronco. It is the internal locking type.

Lock Position

When the transfer case is to be shifted into the position for driving the front axle, the pointer on the center bar of the hub must point to the notch under the word LOCK on the retaining plate. If the clutch teeth do not engage with the knob turned to this position, the clutch teeth are butted and a slight movement of the wheel in either direction will complete the lock. The front axle will now drive the wheels. Do not operate in four-wheel drive with the hubs disengaged.

Free Running Position

When the transfer case is to be shifted into the position for driving the rear axle only, turn the pointer on the center bar of the hub so it points to the notch under the word FREE on the retaining plate. This will disengage the clutch teeth and

thus unlock the wheel hubs from the axle shafts. The wheels will turn freely on the axles.

Be certain that the transfer case is shifted into two-wheel drive position before disengaging the free running hubs.

If difficulty is experienced in disengagement of the free running hubs, a slight movement of the vehicle in either direction with the transfer case in 2 wheel drive position, will reduce driveline wrap-up and ease disengagement.

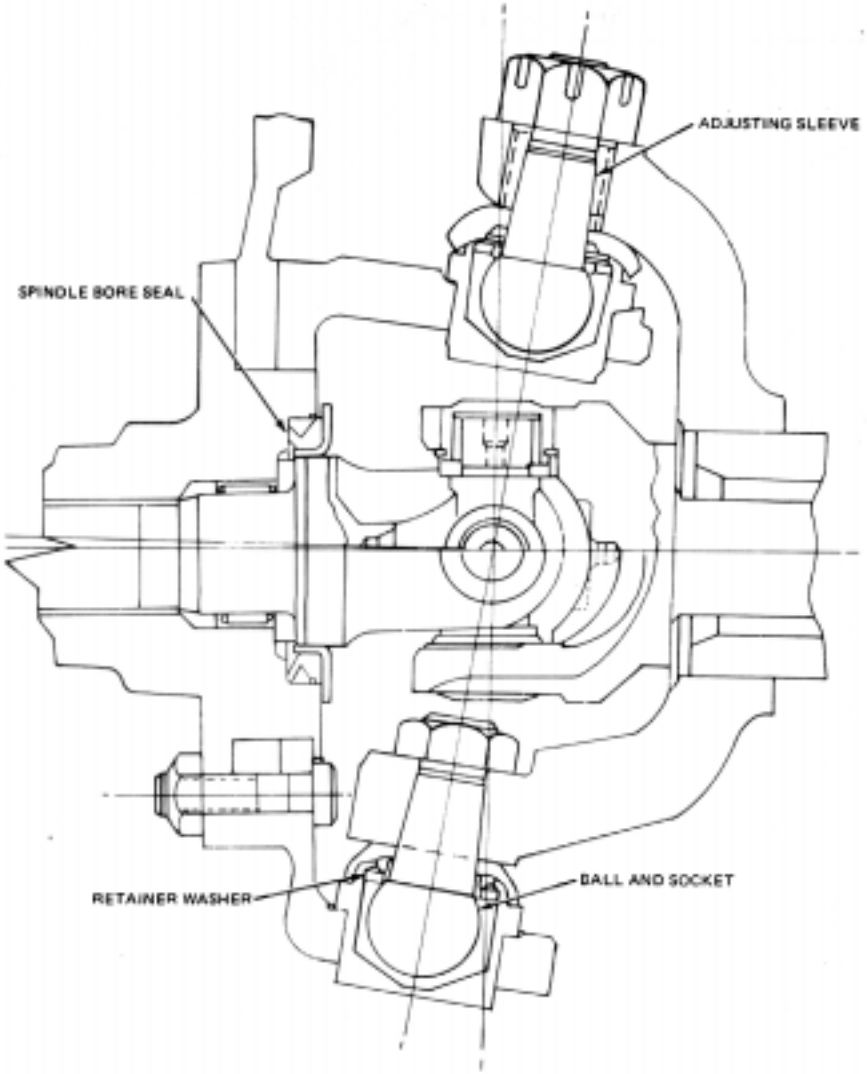

E2259-E

FIG. 1 Ball Joint and Seal Assemblies

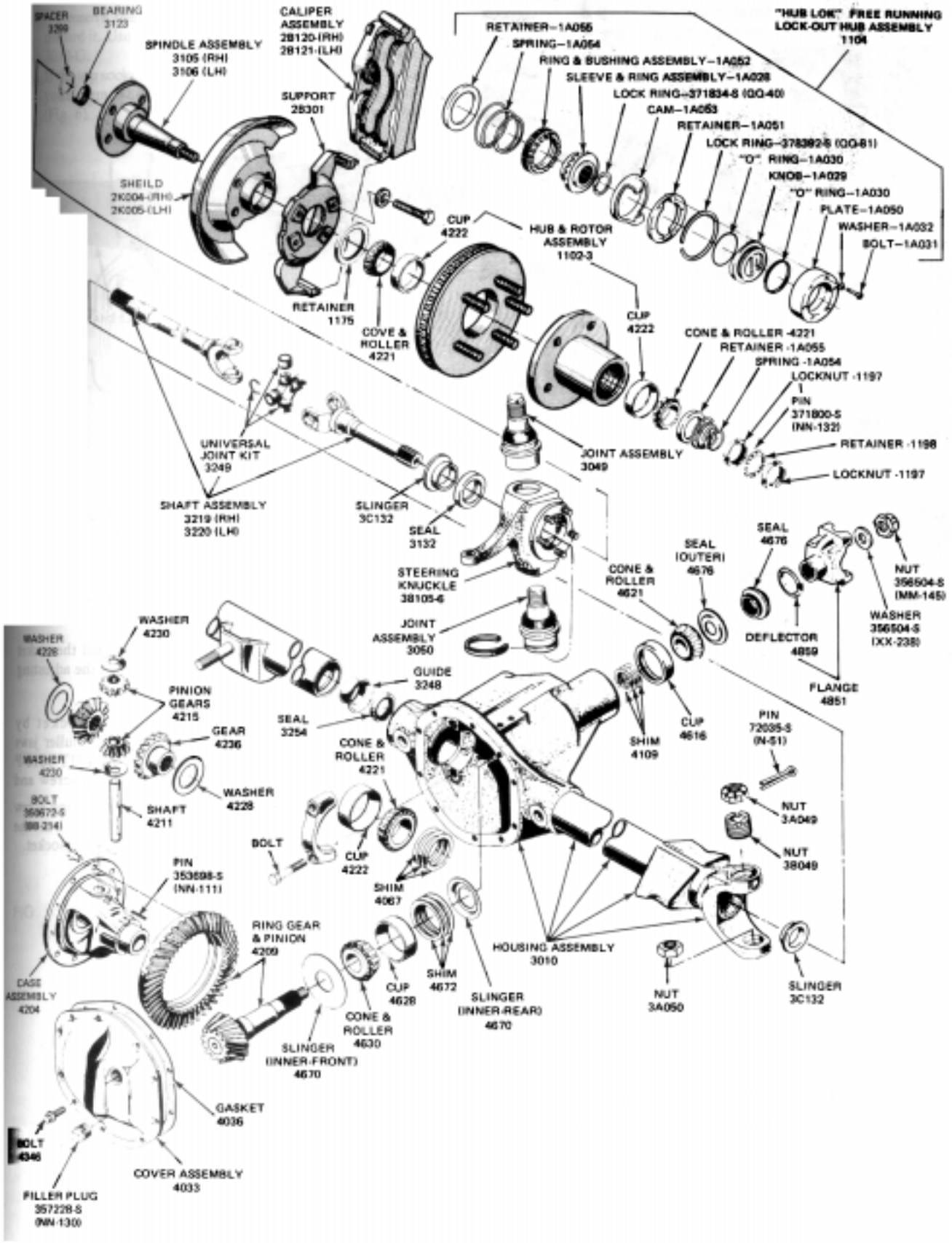

E2337-E

Front Axle Assembly Complete—Exploded View

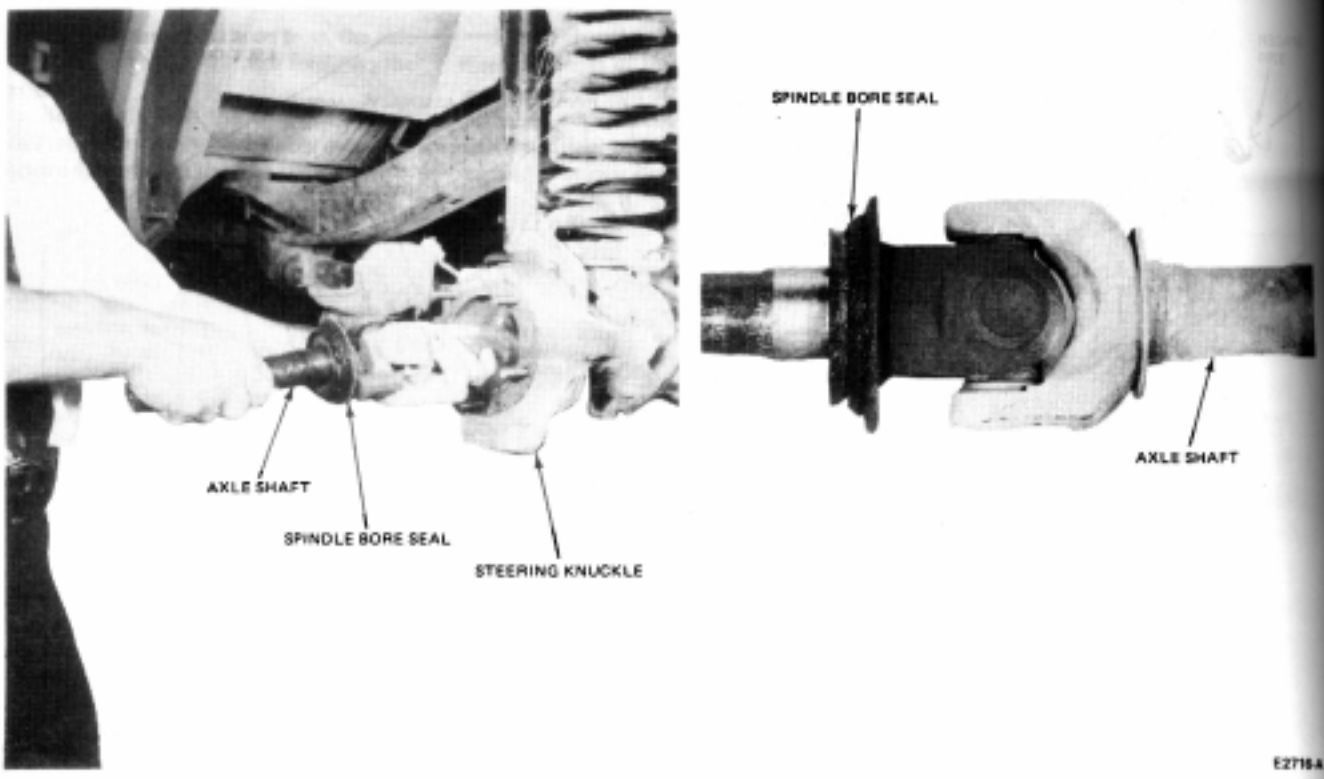

FIG. 3 Removing or Installing Axle Shaft—Typical

REMOVAL AND INSTALLATION

FRONT AXLE SHAFT AND STEERING KNUCKLE

Removal

1. Raise the vehicle on a hoist.
2. Remove each front wheel free-running hub; then remove each front wheel caliper assembly and hub and rotor assembly. Secure the brake assembly to one side to avoid damaging the brake hose. Refer to Part 12-24, for procedures.
3. Remove the nuts that attach the brake support bracket, dust shield and spindle to the steering knuckle (housing). Carefully remove the spindle.
4. Pull the axle shaft assembly from the axle housing, working the U-joint through the bore of the steering knuckle (Fig. 3). **Use care to prevent damage to the seal. If it is bumped against the knuckle bore it can be damaged.** (At this point, the following parts can be replaced without further disassembly of the axle: axle shafts; U-joints; spindle bore seals and deflectors, and spindle bore needle bearings.)
5. To remove the steering knuckle (housing), disconnect the steering connecting rod end from the steering knuckle.
6. Remove the cotter key from the upper ball socket. Loosen the nuts from the upper and lower ball sockets (Fig. 4). Discard the nut from the bottom socket after the knuckle breaks loose from the yoke. This nut is of the torque-prevailing design and is not to be reused.
7. Remove the knuckle from the yoke. (Fig. 5).

   In the event that the top socket should remain in the yoke, remove it by hitting on top of the stud with a rawhide hammer. Discard the sock and remove and discard the adjustin sleeve.
8. Remove the bottom socket b removing the clamps and puller jaw from the T of the puller T71T-3010-F using only the T forcing screw and step plate. Tighten the forcing screw (T71T-3010-N) to push out the bottom socket. Discard the socket.

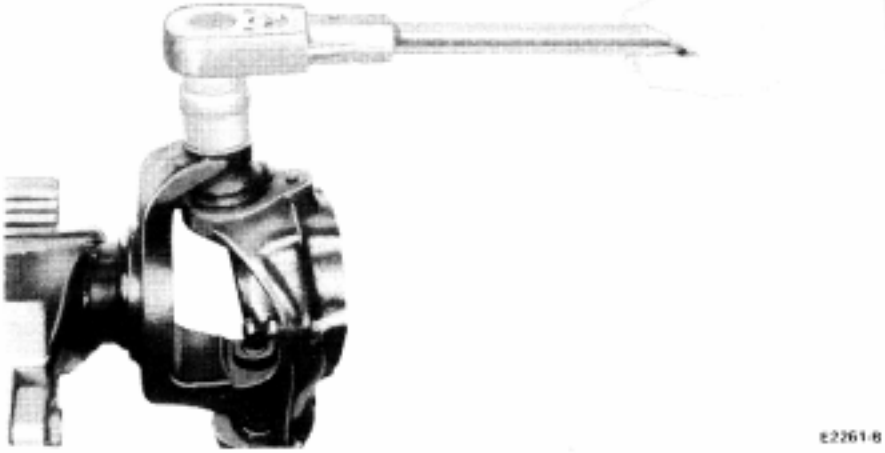

FIG. 4 Nut Removal

Remove the adjusting sleeve and discard it. Use spanner wrench T71T-3010-G.

9. If the top socket did not remain in the yoke, remove it from the knuckle (Fig. 6).

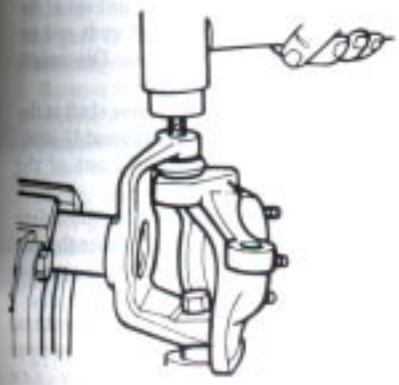

FIG. 5 Knuckle Removal

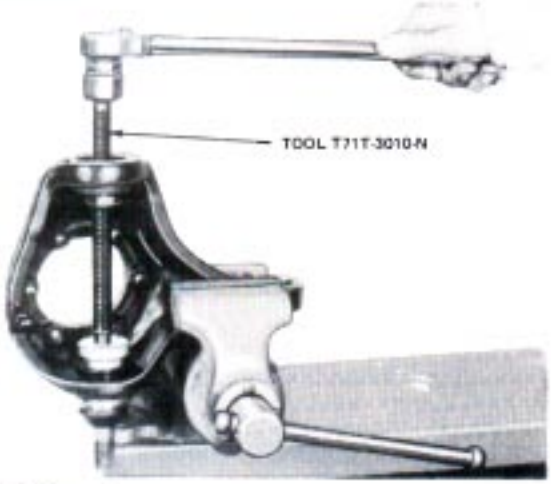

FIG. 6 Top Socket Removal

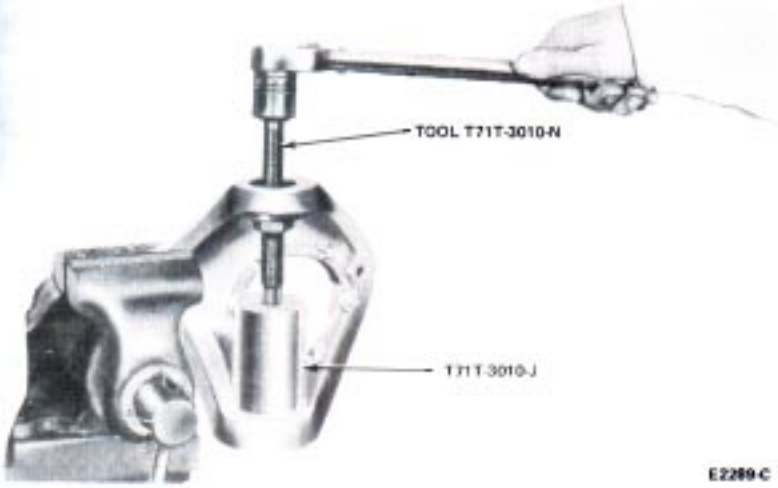

FIG. 7 Bottom Socket Installation

Installation

1. Place the knuckle in a vise and assemble the bottom socket. Place a new socket into the knuckle making sure it is not cocked; place the driver over the socket; place the forcing screw into the driver as shown. Apply torque to the screw and force the socket in the knuckle (Fig. 7).

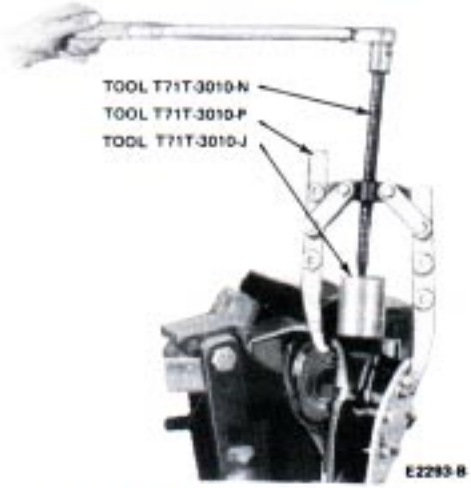

FIG. 8 Top Socket Installation

2. Make sure that the socket shoulder is seated against the knuckle. Use a 0.0015 feeler gauge between the socket and knuckle. The gauge is not to enter at minimum area of contact. Install the snap ring.
3. Assemble the top socket into the knuckle. Assemble the holding plate onto the backing plate screw. Tighten the nuts snugly. Place a new socket into the knuckle. Be sure that the socket is straight and not in a cocked position. Place a driver over the socket. Assemble the puller tool exactly as shown in Fig. 8.
4. Make sure that the socket shoulder is seated against the knuckle. Use a 0.0015 inch feeler gauge between the socket and knuckle. The gauge is not to enter at minimum area of contact.
5. Assemble a new adjusting sleeve into the top of the yoke. Leave approximately two threads exposed. This will protect the threads in the yoke.
6. Assemble the knuckle with the sockets to the yoke. Assemble a new nut to the bottom socket. Tighten the nut finger loose. This will serve as a holding device.
7. Place a spanner wrench and step plate over the adjusting sleeve. Locate the puller exactly as shown, and turn the forcing screw. This will pull the knuckle assembly into the yoke. With torque still applied, tighten the bottom nut on the socket. Tighten the nut to 70-90 ft-lb (Fig.9).

   If the bottom stud should turn with the nut, add more torque to the puller forcing screw. This will eliminate the turning of the stud because it should now be seated into the tapered hole of the yoke. Remove the puller, step plate, and holding plate.
8. Tighten the adjusting sleeve to 40 ft-lb, using T71T-3010-G. Remove the spanner wrench.
9. Assemble the top socket nut. Torque it to 100 ft-lb. Line up the cotter key hole of the stud with the castellation or slot of the nut. Tighten the nut when lining it up with the hole of the stud. Do not loosen the nut. Assemble a new cotter key. Before connecting the steering linkage to the knuckle, test the turning effort. The spring scale pull should not exceed 26 pounds. If it exceeds 26 pounds, the ball joints should be replaced.
10. Connect the steering linkage to the steering knuckle. Torque it to specification.
11. Make sure the seal and deflector are

properly installed on the axle shaft assembly (see inset on Fig. 3 for assembly sequence and position of parts). Assemble the seal on the shoulder of the deflector. Position the wheel bearing spacer, and apply a small amount of lubricant C1AZ-19590-B or equivalent to the exposed face of the spacer; then slide the axle shaft back into the housing, using care not to damage the seal.

12. Install the backing plate, lubricate the spindle using C1AZ-19590-B lubricant or equivalent (see Fig. 10), install the spindle, and torque the retaining screws to 30-40 ft-lb.
13. Install the wheel, hub and drum as an assembly. Then install the free-running hubs (refer to Group 11, Part 12).
14. Fill the axle with the proper grade and quantity of lubricant, as required.

DRIVE PINION OIL SEAL

The drive pinion oil seal can be replaced without removing the axle assembly from the vehilcle. Compounded or synthetic rubber seals do not require soaking. Apply a light coat of axle lubricant to the seal on the shaft contact area.

Removal

1. Raise the vehicle on a hoist or raise the front end of the vehicle with a jack. Install safety stands under the frame rails and lower the jack or hoist far enough to allow the axle to drop into the rebound position for working clearance.
2. Scribe marks on the companion flanges and U-joints for correct positioning at reassembly, and remove the drive shaft.
3. Using Tool 4851-K to hold the pinion companion flange, remove the pinion shaft nut.
4. Using Tool T53T-4851-A, remove the companion flange.
5. Using Tool-1175-AB, puller, in combination with slide hammer T50T-100-A, remove the pinion oil seal.

Installation

1. Clean the drive pinion oil seal seat. Coat the seating edge of the new seal with a small amount of oil-resistant sealer. **Do not put sealer on the sealing lip.** Drive the seal into the housing, using Tool T55P-5676-A.
2. Coat the inside of the pinion flange with a small quantity of rear axle lubricant and install the flange on the pinion shaft, using Tool-4858-E.
3. Install the pinion attaching nut on the pinion shaft and torque it to 200-220 ft-lb.
4. Position the drive shaft in the original location, matching the previously made scribe marks, and install the attaching parts.
5. Tighten the U-joint U-bolt attaching nuts to 15-20 ft-lb.
6. Raise the vehicle, remove the safety stands, and then lower the vehilcle to road position. Check the level of the axle lubricant and add the specified lubricant as necessary.

DANA FOUR-WHEEL DRIVE FRONT AXLE

Removal

1. Raise the vehicle on a hoist or jack and install safety stands under the radius arm brackets.
2. Follow the procedure detailed in Front Axle Shaft and Steering Knuckle Removal and remove the front wheels, tires, calipers, hub and rotor, dust shields, spindles and axle shafts, brake backing plates, spindles and axle shafts.
3. Remove the hydraulic brake lin brackets from each end of the axl without breaking the hydrauli connection. Disengage the hydrauli lines from the axle clips. Tie the line to the frame to keep them out of th working area.
4. Disconnect the steering linkage at th knuckle connecting rod ends and ti it out of the working area. Disconnec the axle stabilizer bar.
5. Disconnect the front drive shaft at th pinion companion flange and U-joint. Secure the drive shaft out of the working area.
6. Lower the vehicle onto the safety stands and place a jack under the axle to support it while disconnecting it from the radius arms.
7. Each radius arm and cap is numbered from 1 through 100 for proper assembly, since they are manufactured as matched pairs. Remove the bolts attaching the radius arms to the radius arm caps. Remove the rubber insulators and roll the axle from under the vehicle, using the jack positioned in Step 6, above.

Installation

1. Position the front-drive axle under the vehicle, using a floor jack, and install the radius arms, insulators and caps to the axle. The numbers enscribed on each cap and arm should agree and be matched together. Tighten the attaching bolts to specification, tightening them diagonally in parts.
2. Raise the vehicle to working height and install the drive shaft to the pinion companion flange at the U-joint. Tighten the U-joint U-bolt nuts to specification.
3. Connect the axle stabilizer bar. Connect the steering tie rod to the steering knuckle by means of the steering connecting rod ends. Tighten the attaching nuts to specification and install cotter pins.
4. Follow the procedure detailed in Front Axle Shaft and Steering Knuckle Installation and install the axle shafts, spindles and brake backing plates.
5. Position the hydraulic brake lines and brackets and install the retaining clips.
6. Install the front hub and rotor assemblies, calipers, wheels and tires. Adjust the front wheel bearings to specification. Install the dust cap or locking hub cap and the wheel cover on each front wheel.
7. Lower the vehicle to running position and fill the axle housing with the specified lubricant.

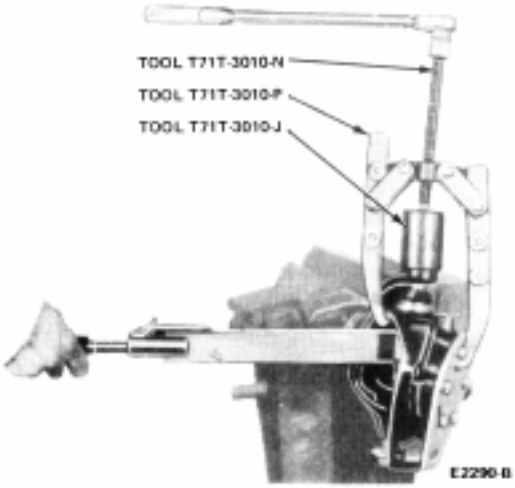

FIG. 9 Assembly of Knuckle to Yoke

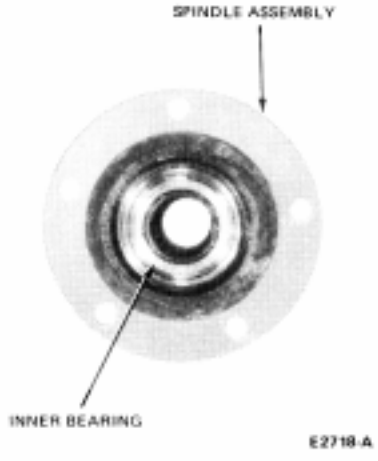

FIG. 10 Spindle Lubrication

DISASSEMBLY AND ASSEMBLY

If the ring gear and pinion are to be replaced, they must be replaced in matched sets. When the new gear set is obtained, check the markings stamped on each gear (Fig. 11).

Disassembly

1. Remove the front drive axle from the vehicle as detailed in Dana Design Front 4-Wheel Drive Axle Removal.
2. Clean around the differential housing cover, and remove it. Discard the cover gasket. Remove the differential bearing caps.
3. Install the housing spreader and adapter (Fig. 12) making sure the tool hold-down clamp screws are tight. Spread the housing until the differential assembly can be forced out with a small pry bar. Do not spread the housing more than 0.020 inch to remove the differential assembly. *Loosen the spreader* thread, immediately after lifting out the differential assembly, to prevent springing the housing.
4. If the differential bearings are to be removed, refer to Specifications for the proper tool.

   A shim pack will be found behind each differential bearing cone. These shim packs control differential bearing preload and pinion and ring gear backlash. When the differential bearing cones are removed, these shim packs are usually damaged by the puller jaws and should be replaced with new shims. Measure each shim pack with a micrometer, shim by shim, and write down the total thickness and location of each pack.
5. Remove the ring gear from the differential case. With two screwdrivers, remove the differential pinion shaft locking rings. Remove the side gears and thrust washers.

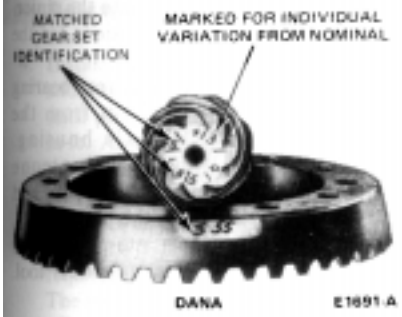

FIG. 11 Pinion and Ring Gear Markings—Dana

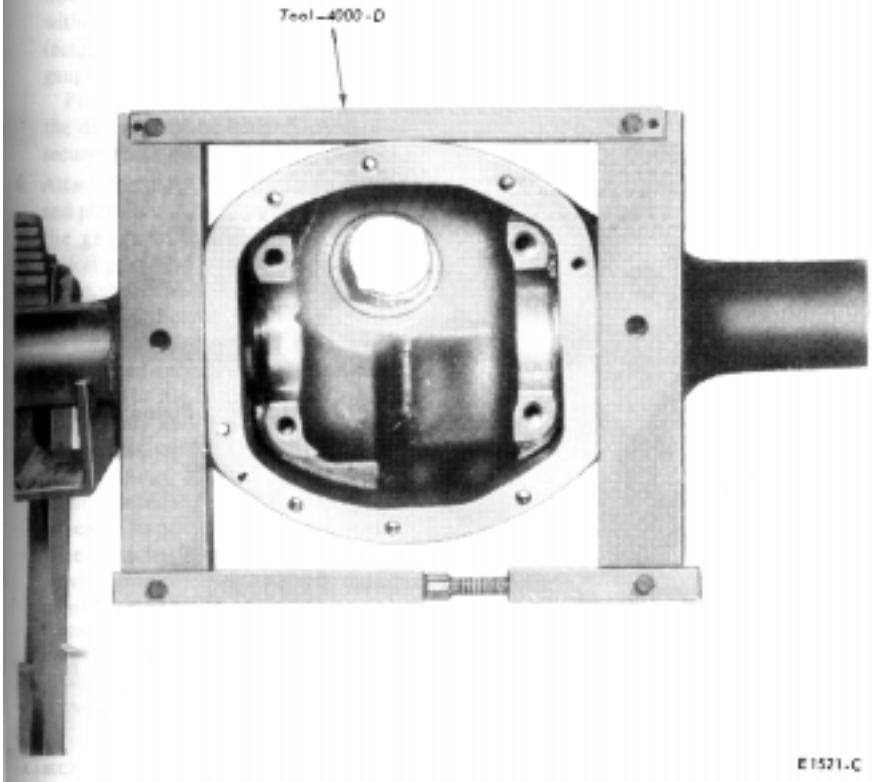

FIG. 12 Spreading Differential Housing

Seals are installed in the axle housing near the differential bearings. If these seals are to be replaced, pry them from the housing with a heavy screwdriver or similar tool.

Use Tool T66T-3002-A to replace *both seals at once. Position the seals* in the respective bores and insert the tool, as shown in Fig. 13. Use a wrench to expand the tool until the seals are fully seated in the bores.

6. Hold the pinion shaft flange and remove the pinion shaft nut. Remove the flange.
7. Tap the pinion shaft out of the front bearing cone, using a rawhide mallet.
8. Remove the pinion bearing preload shim pack from the pinion shaft or from the housing.
9. If the pinion rear bearing cone is to be replaced, use the type of tool shown in Fig. 14.
10. Attach a slide hammer puller tool to the pinion outer bearing cone and remove the bearing cone, slinger, and oil seal from the housing.
11. If the pinion bearing cups are to be replaced or the rear bearing cup removed from shim adjustment, refer to Specifications for the proper remover tools.
12. Clean and inspect the axle parts as detailed in Part 15-01.

ASSEMBLY

Conventional Differential

1. Install the side gears and thrust washers, pinions and thrust washers, and the pinion shaft in the differential case. Install the differential shaft locking pin.
2. Install the ring gear on the differential case, and tighten the attaching bolts to specification.

Differential Bearing End Play Measurement

1. Press the differential bearings onto the case without shims (Fig. 15). The bearings must bottom on the case shoulder.
2. Place the cups on the differential bearings and install the assembly in the housing. Install the bearing caps and tighten the cap bolts just enough to keep the bearing caps in place.
3. Mount a dial indicator on the axle housing, with the indicator button against the ring gear (Fig. 16).
4. Pry the differential assembly away from the dial indicator, using a screwdriver between the bearing cup and the case, and set the indicator at zero. Pry the differential assembly toward the indicator and note the

indicator reading. This reading indicates the amount of shims needed behind the differential side bearings to take up the total clearance between the differential bearing cups and the case. Record this reading.

5. Remove the bearing caps and lift the differential assembly from the housing. Do not install shims under the differential bearings at this time. The total-clearance reading obtained in the above step must be integrated with a second reading to be obtained after the pinion has been installed and the pinion depth has been adjusted. The two readings are used to calculate the shim thickness necessary to obtain the proper differential bearing preload and ring gear backlash, as well as end play adjustment.

Drive Pinion Installation and Depth Adjustment

Two separate adjustments affect pinion and ring gear tooth contact, they are pinion depth (location) and backlash. On Dana axles, the pinion locating shim pack is installed between the pinion rear bearing cup and the carrier housing (Fig. 17). Therefore, adding shims moves the pinion toward the ring gear and removing shims moves the pinion away from the ring gear.

If the original gear set is being installed, install the pinion with the original shim pack and check the pinion location with a depth gauge.

If the ring gear and pinion are being replaced, note that the original factory-installed pinion locating shim is of the correct thickness to adjust for individual variations in both the carrier housing dimension and in the original gear set dimension. Therefore, to estimate the correct shim thickness for the near gear set to be installed, follow these steps:

1. Measure the thickness of the original pinion locating shim with a micrometer.
2. Note the shim adjustment number on both the old pinion and the new pinion. Each pinion gear is marked with an adjustment number.
3. Refer to Specifications for the correct amount of shim thickness change. The amount that is shown under the new pinion shim adjustment number and in line with the old pinion number is the amount of change that should be made to the original shim thickness.

If the old pinion is marked +4, for example, and the new pinion is marked -2, the table indicates that 0.006 inch of shim stock should be added to the original shim pack.

If the original shim pack was lost or if a new axle housing is being installed, substitute a nominal 0.030 inch shim for the original, and repeat the foregoing steps for a trial buildup. If any further shim change is necessary, it will be indicated in the depth gauge check.

A new ring gear and pinion should always be installed in an axle as a matched set (never separately). Be sure that the same matching number appears on both the drive pinion and the ring gear.

Install the pinion with the estimated shim pack, and check the pinion location with a depth gauge as outlined in the following procedure.

Depth Gauge Check

1. Install the pinion locating shim pack and pinion bearing cups. Refer to Specifications for the proper tool.
2. Press the rear bearing onto the pinion shaft. Refer to Specifications for the proper tool.
3. Position the pinion and rear bearing assembly by inserting it from the inner side of the axle housing. Position the front bearing cone (without the preload shim pack) and the U-joint flange on the pinion shaft. Press all these parts into place under a press or with a flange replacer tool.

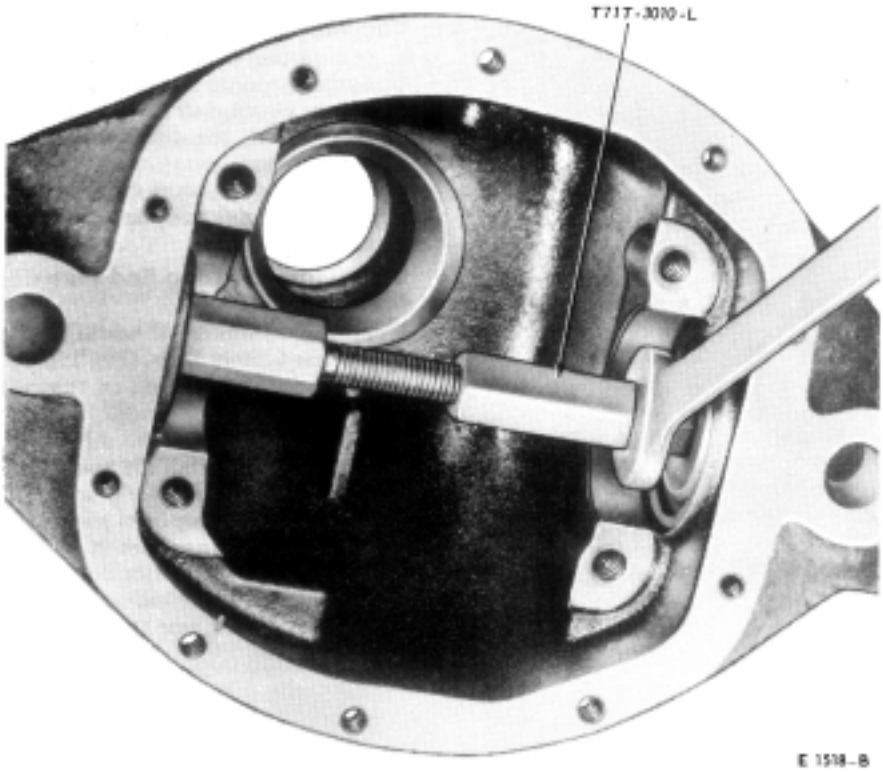

FIG. 13 Installing Inner Seals

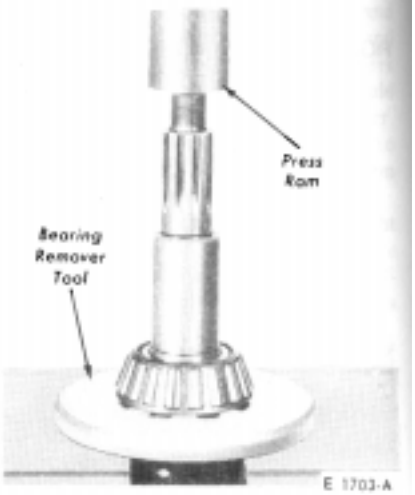

FIG. 14 Removing Pinion Bearing

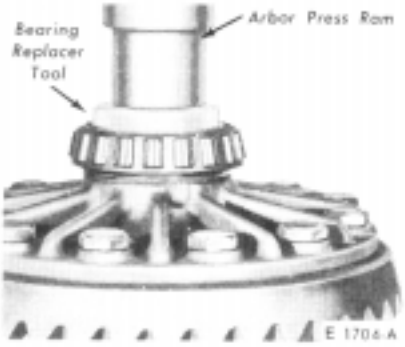

FIG. 15 Installing Differential Bearing

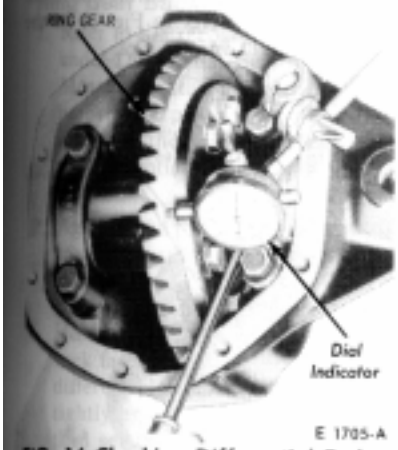

FIG. 16 Checking Differential End Play

Refer to Specifications for the proper tool.

4. Install the pinion shaft flat washer and nut, and carefully tighten the nut until pinion bearing preload is 20-40 in-lb. As the nut is tightened, rotate the pinion shaft in both directions to set the bearing rollers.
5. Check the pinion bearing preload (Fig. 18). Disregard the torque required to start the pinion rotating. The specified torque of 10 to 30 in-lb. refers to the tightening required to keep the pinion rotating after it has been started.

   With the pinion installed in the housing and the bearing preload within limits, check the depth setting (actual assembly dimension) with the gauge shown in Fig. 19.

   Place the gauge shaft and discs in the differential bearing pockets and securely tighten the bearing caps.
6. Attach the dial indicator to its holder and place it on the gauge block. Place the gauge block squarely on the pinion gear and squarely against the gauge shaft.
7. With the indicator button resting on the flat of the gauge block, set the dial face to read zero. Swing the indicator (Fig. 19) to the highest point on the gauge shaft and note the reading at the highest point. The highest point on the gauge shaft is the point of highest indicator reading while the indicator hand is moving clockwise. When the hand reverses and starts moving counterclockwise the highest point has been passed.

   The indicator reading at the highest point on the gauge shaft shows the actual assembly dimension with reference to the nominal assembly dimensions for this axle to be 2.625 inches. The nominal dimension is the distance from the ground surface on the pinion gear rear face to the center line of the ring gear. The highest point on the installed gauge shaft is exactly 1/2 inch higher than the ring gear centerline. The installed gauge block height is exactly 1/2 inch greater than the nominal assembly dimensions for the axle.

   When the gauge block is resting on a zero-marked pinion installed exactly at the nominal assembly dimension, the top of the gauge block and the highest point on the gauge shaft are exactly the same distance from the pinion gear rear face. In this case, the indicator, having been set at zero on the gauge block, will read zero when moved to the highest point on the gauge shaft. A plus or minus reading on the indicator at the hightest point on the gauge shaft indicates, therefore, that the actual assembly dimension is not the same as the nominal assembly dimension. The plus and minus indicator readings are translated directly into plus and minus variations from the nominal assembly dimension.

   The indicator reading at the highest point on the gauge shaft must correspond with the pinion gear marking, if the actual assembly dimension is correct. For example, a pinion marked minus 3 is installed at the proper depth when the indicator reads minus 3 at the highest point on the gauge shaft. Likewise, a pinion marked plus 3 is installed at the proper depth when the indicator reads plus 3 at the highest point on the gauge shaft.

   A plus reading (clockwise from zero) at the highest point on the gauge

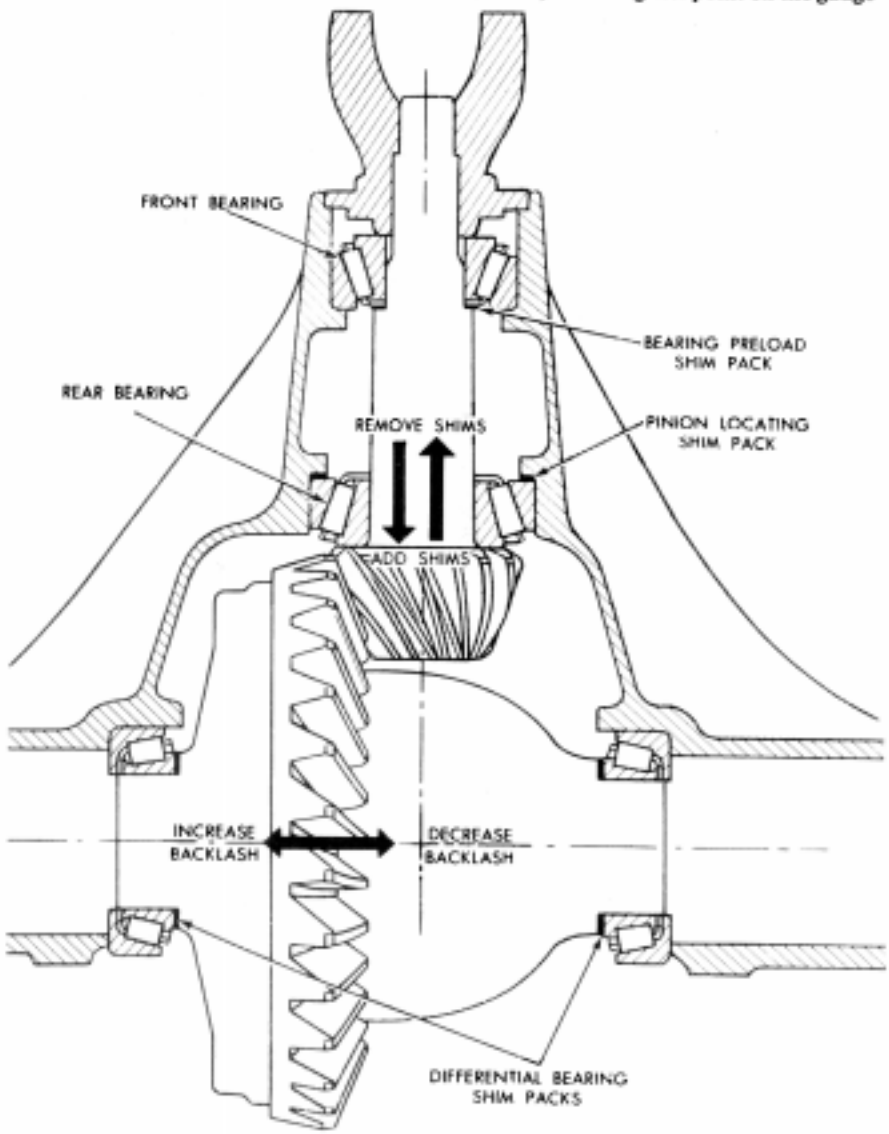

FIG. 17 Pinion and Ring Gear Tooth Contact

shaft with a zero-marked pinion, means that the actual assembly dimension is too great in the amount of the plus reading. To correct, add shims in thousandths of an inch that correspond to the plus reading. For example, an indicator reading of plus 10 with a zero marked pinion means that 0.010 inch in shims must be added to the rear bearing cup pack. The addition of shims will move the pinion gear closer to the ring gear and decrease the actual assembly dimension (Fig. 17).

Likewise a minus reading (counterclockwise from zero) at the highest point on the gauge shaft with a zero-marked pinion, means that the actual assembly dimension is deficient in the amount of the minus reading. To correct, remove shims in thousandths of an inch equal to the minus reading. This will increase the actual assembly dimension.

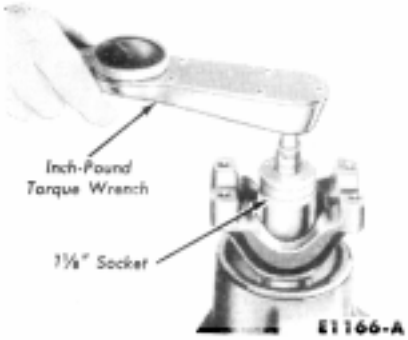

FIG. 18 Checking Pinion Bearing Preload

Whenever the pinion rear bearing cup shim pack is changed, install the pinion and recheck the pinion depth.

8. After the pinion depth has been adjusted and checked, remove the U-joint flange and front bearing. Add or subtract from the original front pinion bearing preload shim pack the same amount in thousandths of an inch that was added or subtracted from the shim pack behind the rear bearing cup (Fig. 17). Install the bearing preload shim pack, the outer bearing, the U-joint flange, washer and nut. Tighten the flange nut to 200-220 ft-lb on all models.
9. Check the pinion bearing preload (Fig. 18). The preload should be 20 to 40 in-lb. Add shims to decrease the preload and remove shims to increase the preload.

If the original bearing preload shim pack has been lost or there is reason to believe that it was not correct, install a 0.065-inch shim pack for a trial build-up. Check the pinion bearing preload and adjust as necessary to obtain a 15-35 in-lb preload on new bearings or 10-25 in-lb on used bearings.

10. When the pinion bearing preload is correct, remove the U-joint flange.

Install the oil slinger on the outer side of the front pinion bearing and install the oil seal. Refer to Fig. 13 for the proper seal installer tool.

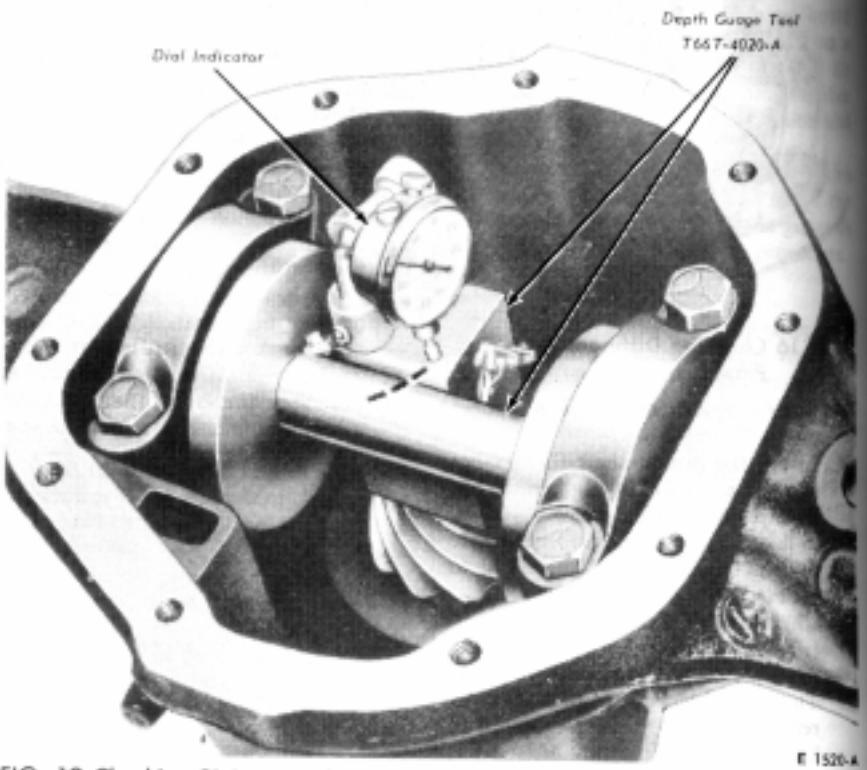

FIG. 19 Checking Pinion Depth

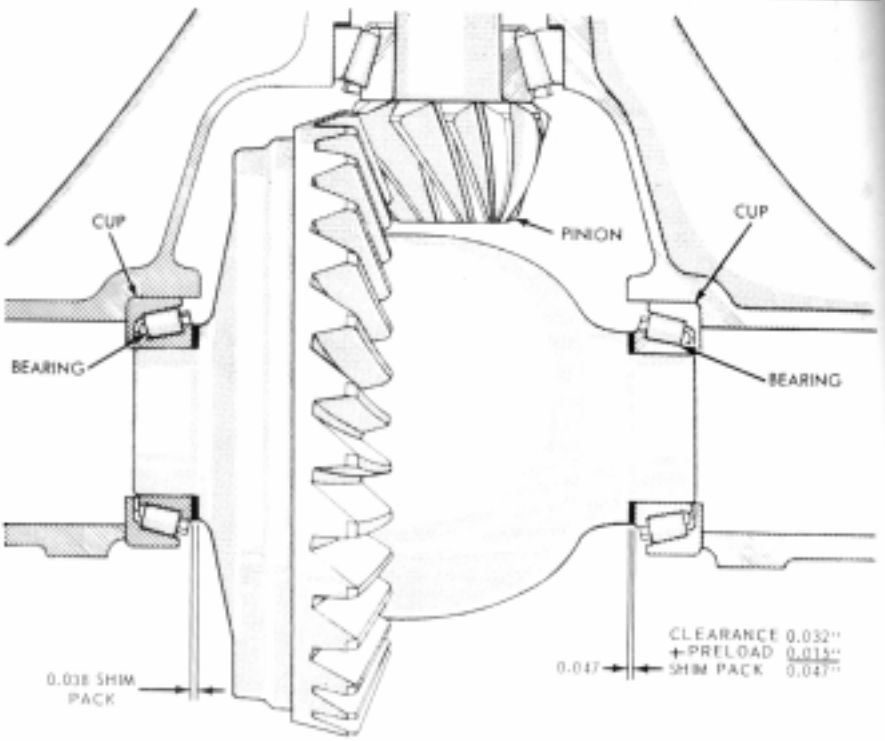

FIG. 20 Differential Bearing Preload and Ring Gear Backlash

Differential Bearing Preload and Ring Gear Backlash Adjustment

1. Refer to the reading taken in Step 4 under Differential Bearing End Play Measurement. This reading (taken before the pinion was installed) represents the total clearance between the differential side bearing cups and the case.
2. Again install the differential assembly in the housing (this time with the pinion installed), and tighten the bearing caps lightly. Install the dial indicator with the button against the back face of the ring gear. Move the differential and ring gear assembly tightly against the pinion gear and then set the dial indicator to zero. Move the differential and drive gear assembly toward the indicator, and note the reading.
3. This reading indicates the amount of shims necessary to take up the clearance between the bearing cup and the case at the ring gear side of the differential assembly. Subtract this reading from the previously recorded total reading to obtain the amount of shims necessary to take up the clearance between the bearing cup and the case at the pinion side of the differential. Increase this pinion-side shim pack by an additional 0.015 to 0.020 inch in order to provide the correct bearing preload and backlash.

   Example (Fig. 20): Total clearance previously recorded . . . 0.070 inch. Less reading in foregoing Step 2 (Amount of shims necessary to take up clearance at ring gear side) . . . 0.038 inch. Shims necessary to take up clearance at pinion side . . . 0.032 inch. Plus 0.015 inch shims for preload and backlash. Total amount of shims at pinion side . . . 0.047 inch.
4. Remove the bearing caps, and lift the differential assembly from the housing. Remove the differential side bearings, and install the proper amount of shims on each side of the differential case. Press the side bearings onto the case until they are firmly seated against the shims.
5. Install the housing spreader, spread the housing not more than 0.020 inch, and install the differential assembly. Install the bearing caps, and remove the spreader. Install and tighten the cap bolts to specification.
6. Install a dial indicator to check the backlash at four equally spaced points around the ring gear. The backlash must be held to 0.005-0.009 inch and cannot vary more than 0.003 inch between the positions checked. If the backlash does not fall within these specifications, change the shim packs behind both differential side bearings, as required.
7. Check the gear tooth contact pattern as given in Fig. 3 in Part 15-01.
8. Position a new gasket on the rear face of the axle housing, and install the rear cover and ratio identification tag. Tighten the cap-screws to 30-40 ft-lb.
9. Install the axle in the vehicle according to the instructions under Removal and Installation.

SPECIFICATIONS

DRIVE PINION ADJUSTING SHIM THICKNESS CHANGES DANA

Old Pinion Marking*	New Pinion Marking								
	.4	.3	.2	.1	0	+1	+2	+3	+4
+4	+0.008	+0.007	+0.006	+0.005	+0.004	+0.003	+0.002	+0.001	0
+3	+0.007	+0.006	+0.005	+0.004	+0.003	+0.002	+0.001	+0	−0.001
+2	+0.006	+0.005	+0.004	+0.003	+0.002	+0.001	0	−0.001	−0.002
+1	+0.005	+0.004	+0.003	+0.002	+0.001	0	−0.001	−0.002	−0.003
0	+0.004	+0.003	+0.002	+0.001	0	−0.001	−0.002	−0.003	−0.004
−1	+0.003	+0.002	+0.001	0	−0.001	−0.002	−0.003	−0.004	−0.005
−2	+0.002	+0.001	0	−0.001	−0.002	−0.003	−0.004	−0.005	−0.006
−3	+0.001	0	−0.001	−0.002	−0.003	−0.004	−0.005	−0.006	−0.007
−4	0	−0.001	−0.002	−0.003	−0.004	−0.005	−0.006	−0.007	−0.008

DANA AXLE TORQUE LIMITS — (FT-LB)

Description	Ft-Lb	Description	Ft-Lb
Pinion Shaft Nut	200-220	Ball Joint Nut — Top	100
Differential Bearing Cap Bolts	70-90	— Bottom	70-90
Ring Gear Attaching Bolts	45-65	Oil Filler Plug	40
Cover to Housing Bolts	30-40	U-Joint Bolts	15-20
Spindle Nut to Wheel Hub — Inner	50 [1]	Backing Plate and Spindle to Steering Knuckle Retaining Bolts	30-40
— Outer	80-100		

DANA AXLE ADJUSTMENTS

Description	Inch	Description	Scale Pull Lb
Backlash Between Ring Gear and Pinion	.005-.009	Steering knuckle Turning Effort — Tie Rod Disconnected (1 Knuckle)	26
Backlash Maximum Variation Between Teeth	.003		
Pinion Bearing Preload	15-35 in.-lbs.		

[1] Torque to 50 ft-lb, then back off 90 degrees and rotate to closest pin hole.

[2] A torque prevailing nut. Do not reuse.