New Process 435 Four-Speed Transmission

PART 16-25

SUBJECT	PAGE
DESCRIPTION	25-1
REMOVAL AND INSTALLATION	25-3
DISASSEMBLY AND ASSEMBLY	
Sub-Assemblies	
Countershaft Gear Front Bearing	25-9
Countershaft Gear Rear Bearing	25-9
First Speed Gear	25-10
Gearshift Housing	25-9
Input Shaft Bearing	25-10
DISASSEMBLY AND ASSEMBLY — Sub-Assemblies (Cont'd)	
Input Shaft Bearing Race	25-9
Input Shaft Roller Bearings	25-10
Input Shaft Seal	25-10
Reverse Idler Gear Bearings	25-10
Second Speed Gear	25-10
Transmission	25-4
SPECIFICATIONS	25-14

DESCRIPTION

TRANSMISSION

The Model 435 four-speed transmission (Fig. 1), is provided with a floor-mounted shift lever or with a floor-mounted remote-control gearshift lever.

The first and reverse gears are spur cut (Fig. 2). The second, third and fourth gears are helical cut and are synchronized to permit easier shifting.

The input shaft is supported by a tapered roller bearing. The input shaft end play is controlled by the thickness of gaskets between the case and the front bearing retainer.

The front end of the output shaft is supported by a pilot bearing that is located in the input shaft. The rear end of the output shaft is supported by a ball bearing that is pressed onto the shaft. The bearing and shaft are held in the case by a snap ring and a bearing retainer. Retention of the output shaft in the case may vary, depending on application, with the various extension housings that are used (Figs. 2 and 4) to fit several vehicle models.

The third- and fourth-speed synchronizer is mounted on the forward end of the output shaft and is held in place by the gear end of the input shaft and the third-speed gear. The third- and second-speed gears are located between the shoulder and the third- and fourth-speed synchronizer on the output shaft.

The second-speed synchronizer and the first-speed sliding gear are located toward the rear of the output shaft (Fig. 2). A spacer is provided to prevent the first-speed sliding gear from contacting the case.

The countershaft gear is supported by roller bearings installed at both ends of the gear. A roller-type thrust bearing and a bearing race are provided at the rear end of the gear. A thrust washer is also provided at the front of the gear. Uncaged rollers are used in production, but caged roller assemblies are available for service.

The reverse idler gear is supported by roller bearings except in F-100, -350 and P-500 installations, where a bronze bushing is used. Only the roller bearing-type gear is supplied for service replacement, however. The bearings are installed between the gear and a sleeve on the reverse idler shaft. The sets of bearings are separated by a snap ring and bearing race retainer spacer. Snap rings, installed in the center of the reverse idler gear, hold the entire assembly in position.

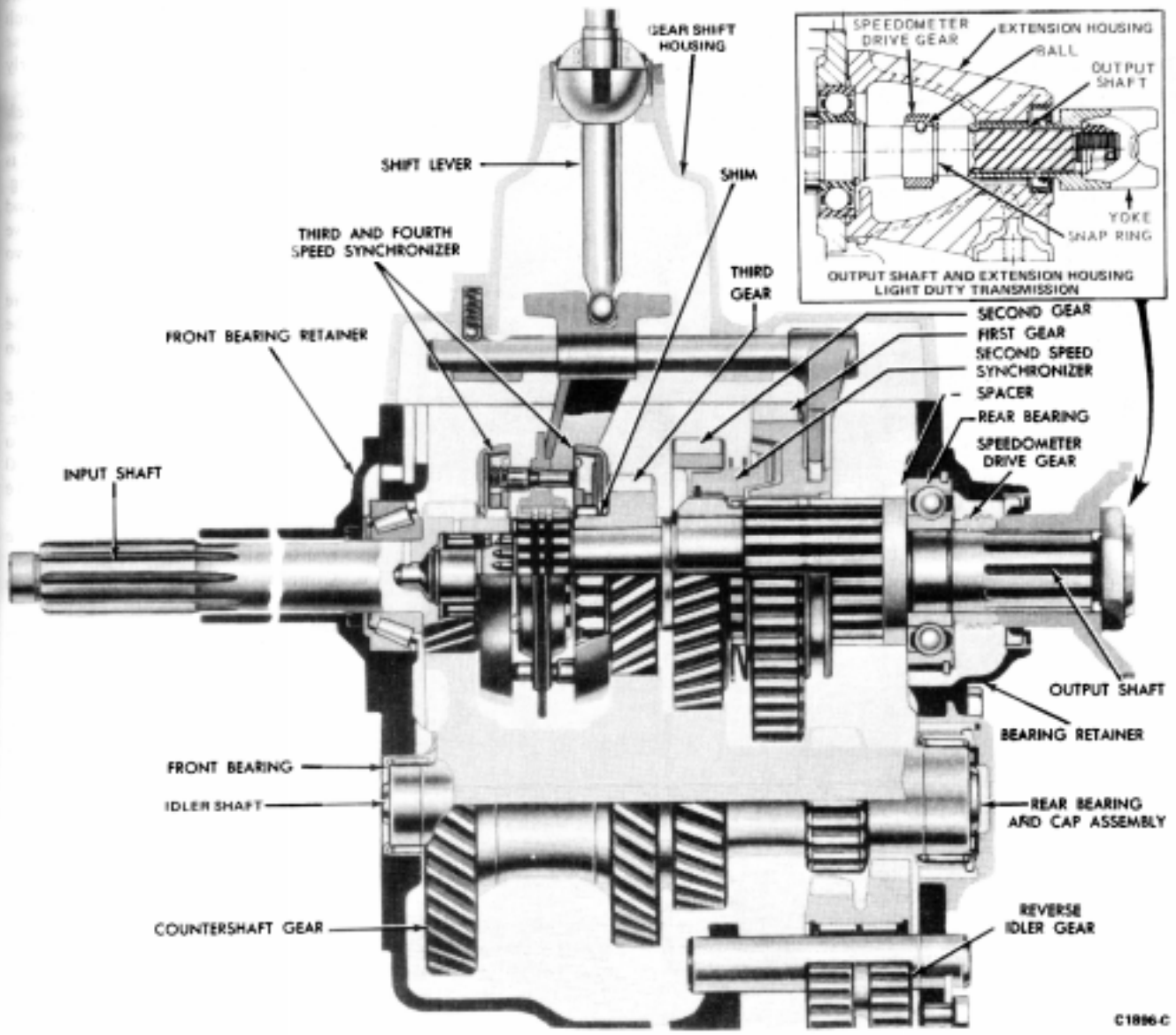

FIG. 2 Transmission Sectional View

REMOVAL AND INSTALLATION

TRANSMISSION

Refer to Figs. 2, 3 and 4 for various installation views.

Removal

1. On F-, LN- or B-Series vehicles, remove the rubber boot and floor mat.
2. On F-, LN- or B-Series vehicles, remove the floor pan transmission cover plate. Remove the weather pad on F-100—F-350. It may be necessary first to remove the seat assembly.
3. Disconnect the back-up light switch located in the rear of the gearshift housing cover.
4. Raise the vehicle and position safety stands. Position a transmission jack under the transmission, and disconnect the speedometer cable.
5. Disconnect the parking brake lever from its linkage, and remove the gearshift housing. On a C-Series vehicle, disconnect the parking brake cable and bracket at the transmission.
6. Disconnect the drive shaft or coupling shaft. Remove the bolts that attach the coupling shaft center support to the crossmember and wire the coupling shaft and drive shaft to one side. On F-100 -350 Series vehicles, remove the transmission rear support.
7. On C-Series vehicles, remove the two transmission upper mounting nuts at the clutch housing (Fig. 3).
8. Remove the transmission attaching bolts at the clutch housing, and remove the transmission.

Installation

Before installing the transmission, apply a light film of lubricant (C1AZ-19590-B) to the release lever fulcrum and fork. Do not apply a thick coat of grease to these parts, as it will work out and contaminate the clutch disc.

1. Place the transmission on a transmission jack, and raise the

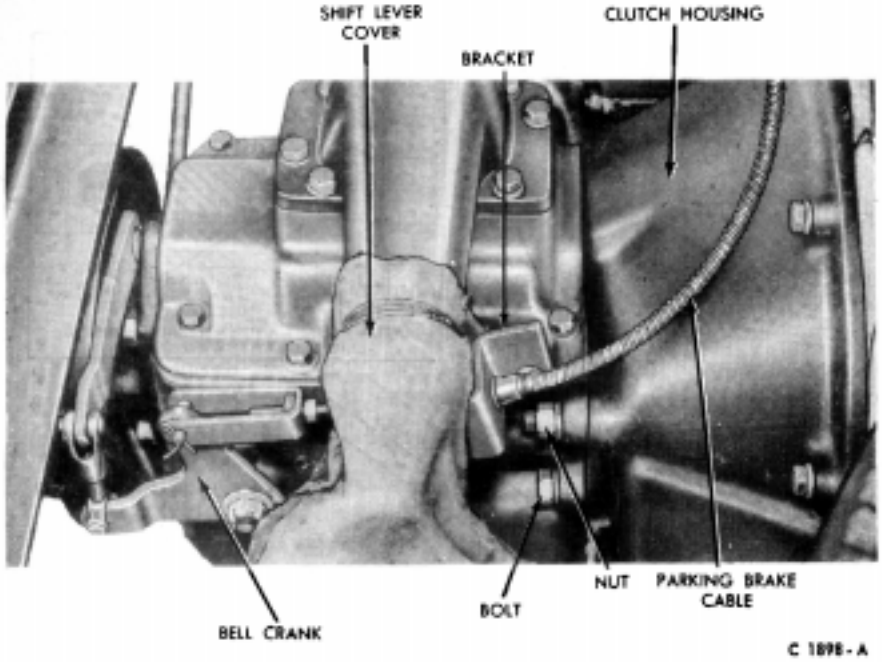

FIG. 3 Transmission Installed—C-Series

transmission until the input shaft splines are aligned with the clutch disc splines. The clutch release bearing and hub must be properly positioned in the release lever fork.

2. Install guide studs in the clutch housing and slide the transmission forward on the guide studs until it is in position on the clutch housing. Install the attaching bolts or nuts, and tighten them to specification. Remove the guide studs and install the two lower attaching bolts.
3. Install the bolts attaching the coupling shaft center support to the crossmember. Tighten the bolts to specification.
4. Connect the drive shaft or coupling shaft and the speedometer cable. Tighten the U-joint nuts to specification. On F-100 and -350 Series vehicles, install the transmission rear support.
5. Connect the brake to the transmission.
6. Connect the back-up light switch wire.
7. On F-, LN- or B-Series vehicles, install the transmission cover plate. Install the seat assembly if it was removed.
8. On F-, LN- or B-Series vehicles, install weather pad, pad retainer, floor mat, and rubber boot.

DISASSEMBLY AND ASSEMBLY

TRANSMISSION

Disassembly

1. Place the gearshift lever in the neutral position, remove the gearshift housing attaching bolts, and remove the housing.
2. Lock the transmission in two gears, and remove the output flange nut. Remove the parking brake drum, brake and flange.
3. Remove the extension housing attaching bolts or nuts. Remove the extension housing from the output shaft.
4. Slip the speedometer drive gear off the output shaft.
5. Remove the front bearing retainer attaching bolts. Remove the retainer and gasket.
6. Rotate the input gear as required to align the notch in the input gear clutch teeth with the countershaft drive gear teeth. Remove the input gear and tapered roller bearing from the transmission (Fig. 5 and 6).
7. Remove the output shaft bearing (Fig. 8).
8. Remove the roller-type thrust bearing from the front of the output shaft.
9. Slide the third- and fourth-speed synchronizer off the output shaft and remove it from the case.
10. Lift the output shaft from the case as shown in Fig. 7.
11. Remove the reverse idler gear shaft retainer from the rear of the case (Fig. 7). Secure the puller T50T0100-A and adapter T50T-7140-B to the shaft. Hold the gear to prevent it from dropping, and then remove the idler shaft.
12. With the front of the transmission in the downward position, remove the attaching bolts from the countershaft gear rear bearing cap. Tap the cap with a soft-faced hammer to free it from the case. Remove the cap, race thrust bearing, and gasket (Fig. 9). Lift the gear from the case.

Assembly

Coat all parts with the specified transmission lubricant to prevent scoring when the transmission is first operated.

1. Place the input shaft, third/fourth speed synchronizer assembly clutch gear and thrust bearing on the output shaft and secure the complete assembly in a vise as shown in Fig. 10.

   On F-100-F-350, P-500 check the distance between the synchronizer and input shaft gear. If the distance is more than .070 to .095 inch, install the necessary thickness of shims between the third-speed gear and the synchronizer brake drum. After the proper thickness of shims has been established, remove the input shaft from the output shaft.

   The third- and fourth-speed synchronizer is a one-piece assembly consisting of a sliding clutch hub, three energizing pins, two energizing springs, three blocking ring pins, and two aluminum inner stop rings assembled as an integral unit. In addition, there are two outer stop rings.

   When replacing the third- and fourth-speed synchronizer, use the new assembly (D3TZ-7124-B/NPG No.11338). Also, be sure to use the new outer stop rings, which are necessary to protect the inner stop rings against premature failure. Never mix old and new parts nor use old-style or worn outer stop rings.
2. Position the transmission case with the front in the downward position.
3. Apply a thin film of grease on the front thrust washer and position it in the front of the case. The thrust washer is bored off-center, therefore, make sure that the tangs match the slots in the case boss.

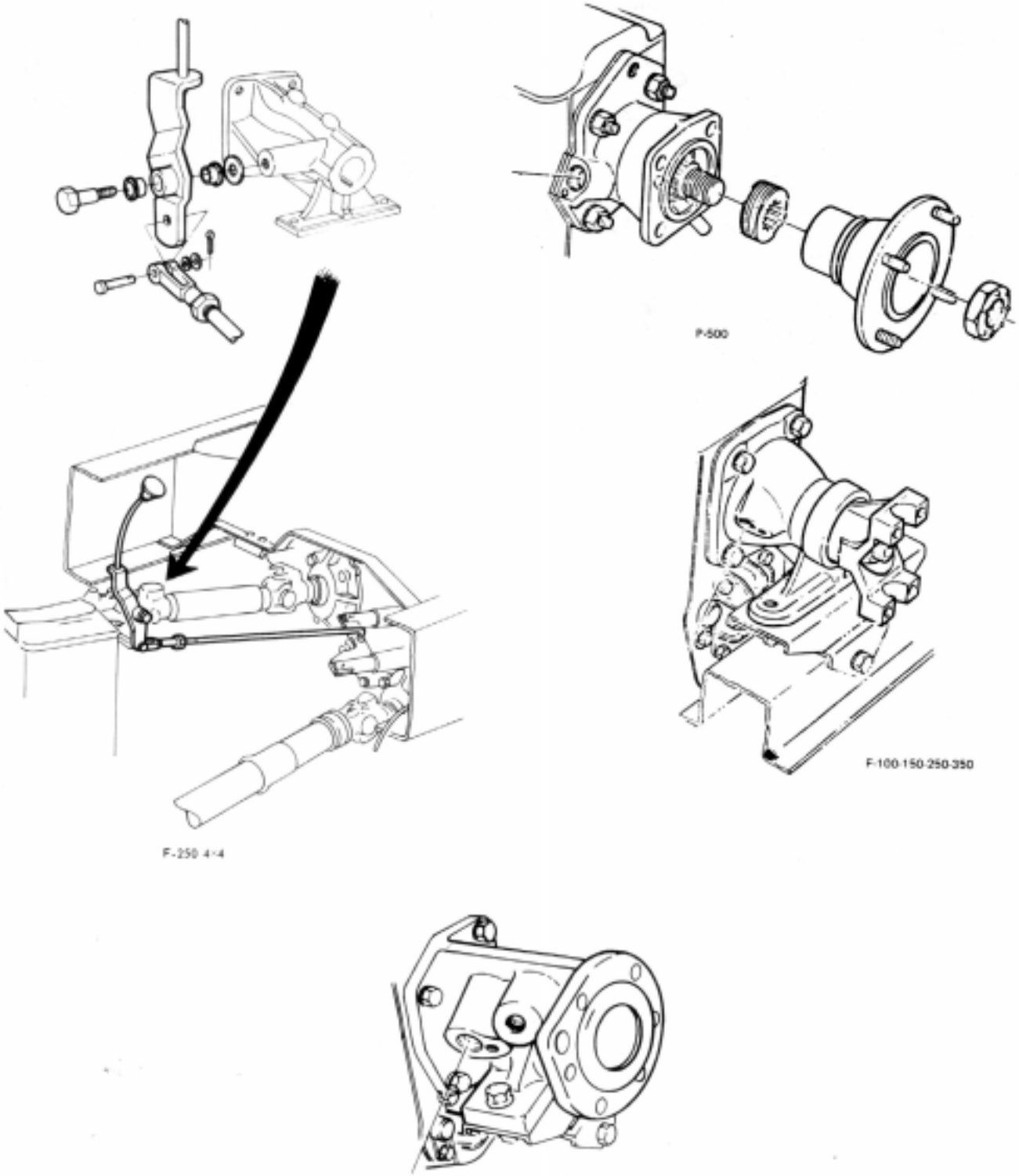

C2608 D

FIG. 4 Light Truck Installations—Model 435 Transmission

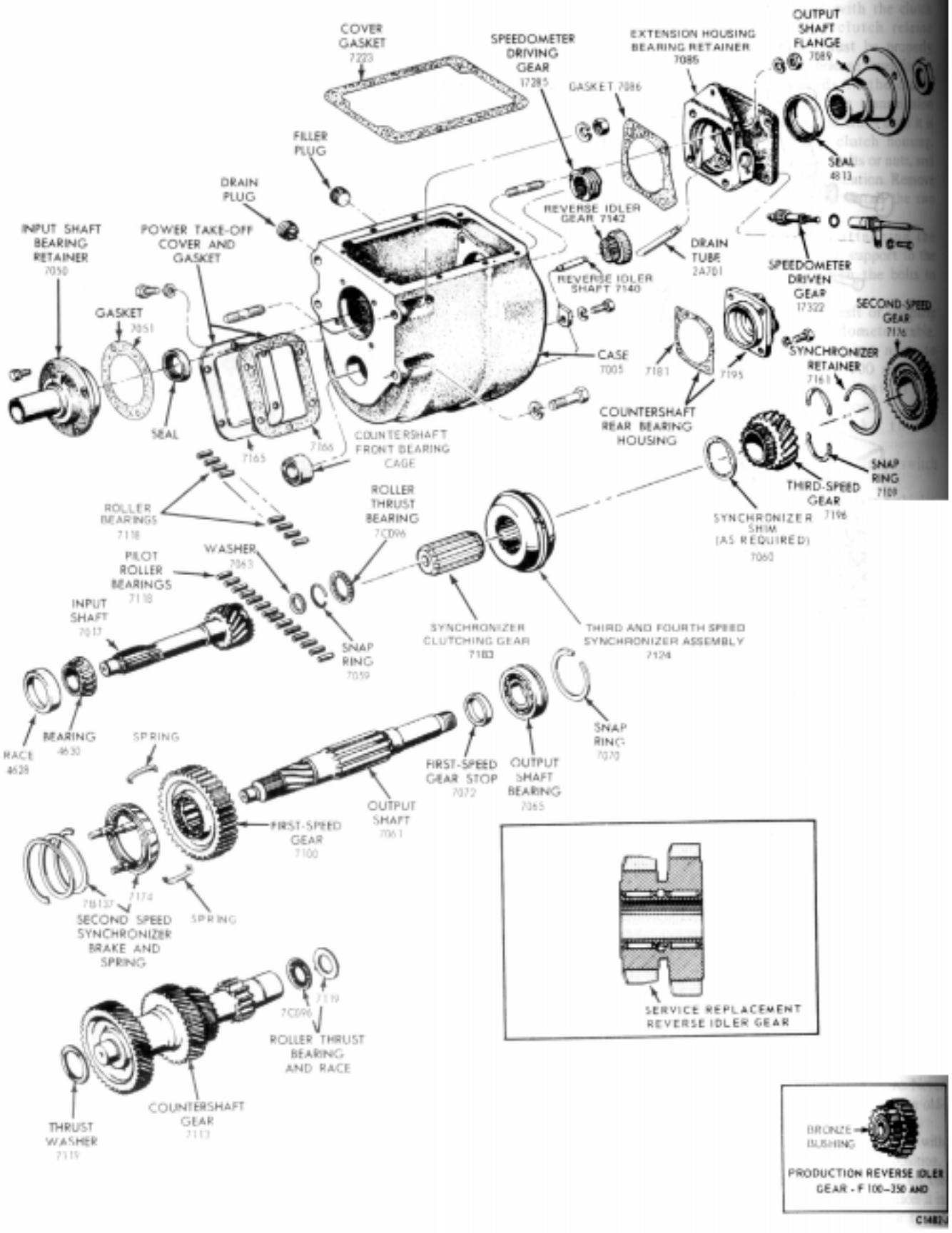

FIG. 5 Transmission Disassembled—F-100-350, P-500

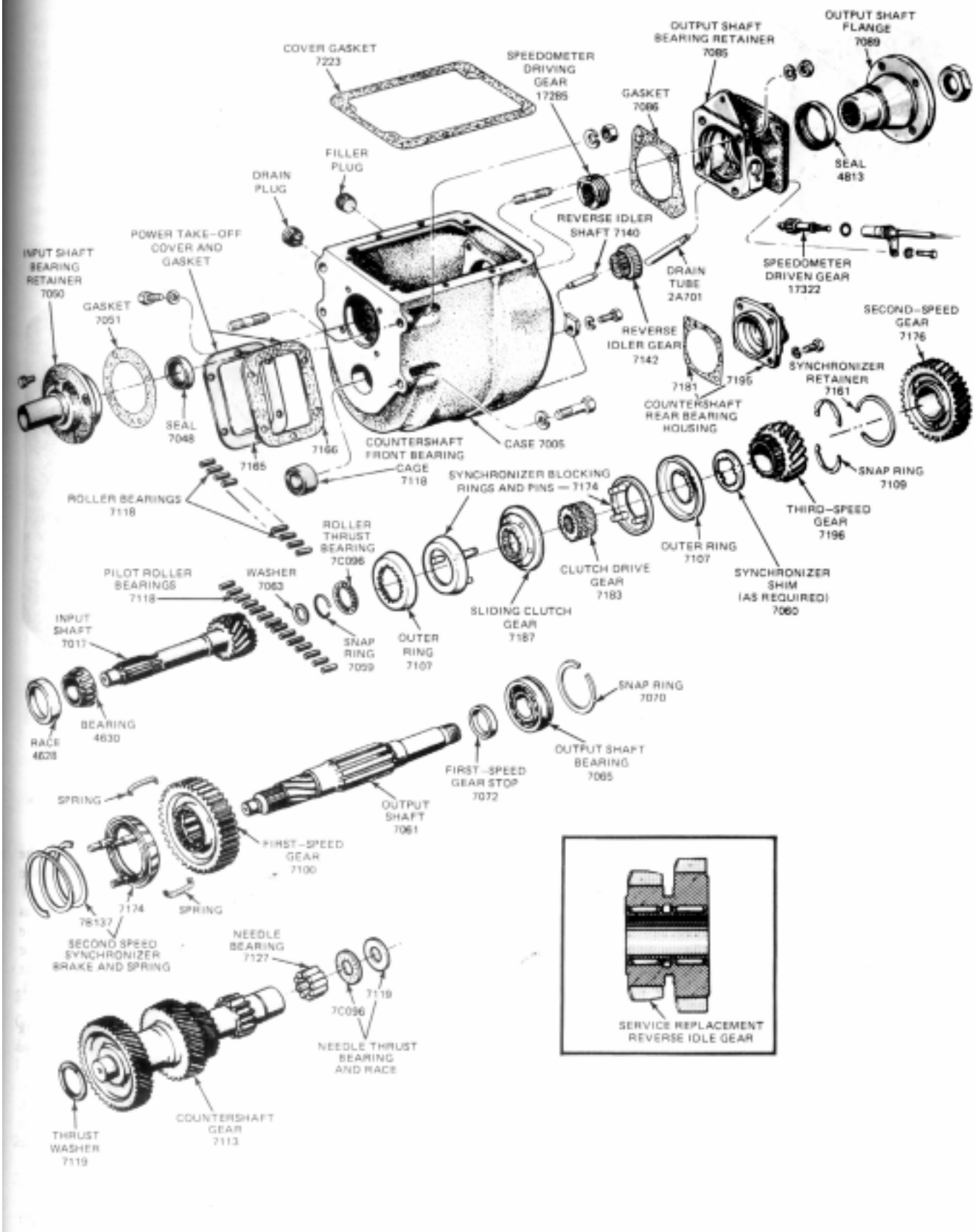

FIG. 6 Transmission Disassembled F and B 500-700 LN-600, 700, C-600, 700

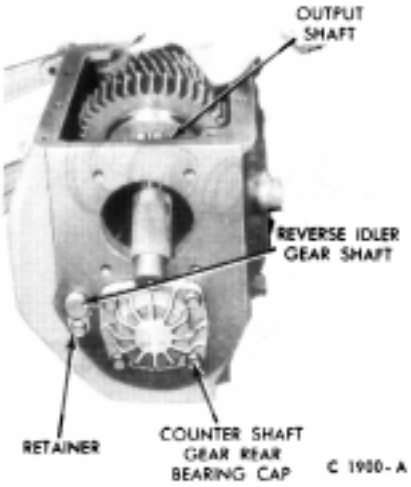

FIG. 7 Removing Output Shaft

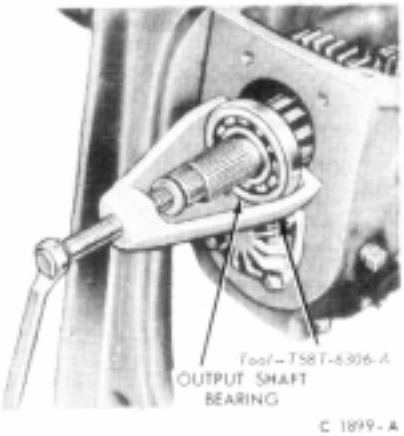

FIG. 8 Removing Output Shaft Bearing

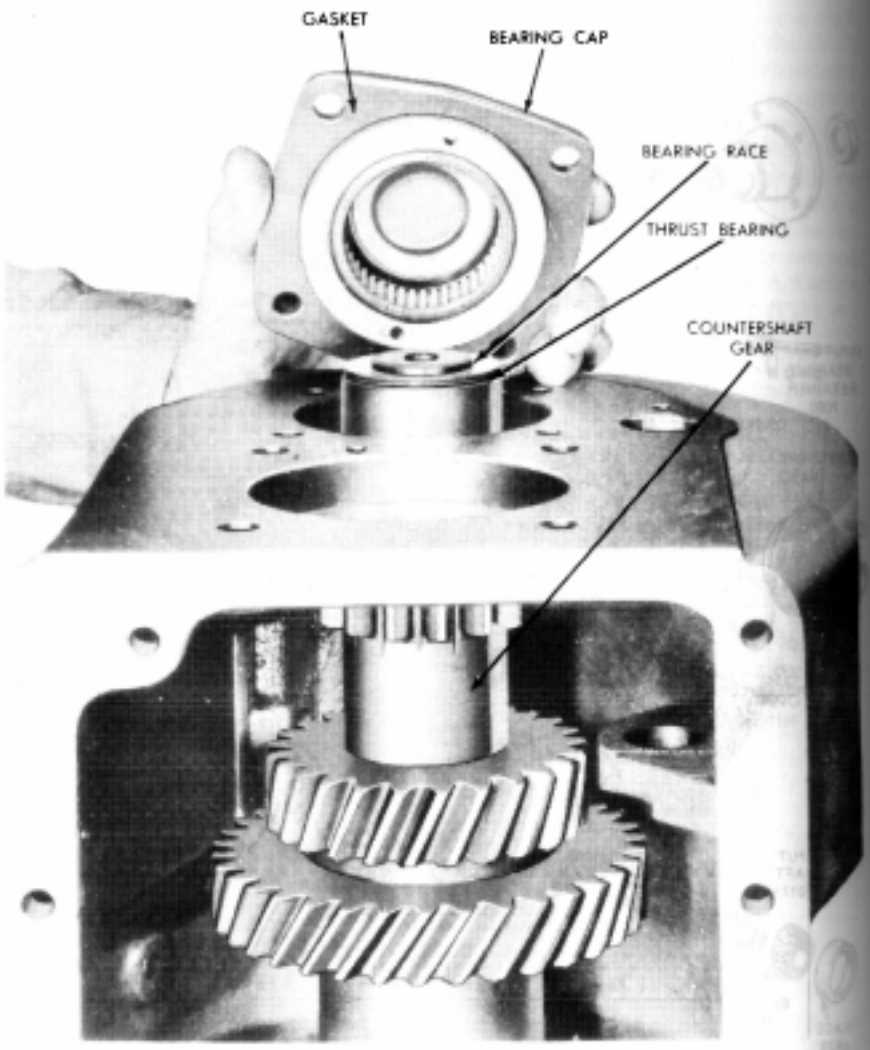

FIG. 9 Removing or Installing Countershaft Rear Bearing

4. Place the countershaft gear in the case.
5. Place the rear thrust bearing and then the bearing race on the rear of the countershaft gear (Fig. 9).
6. Install a new gasket on the bearing cap. Then coat the bore of the bearing cap with grease to retain the roller bearings and insert the bearings. Install the bearing cap on the rear of the case. Tighten the attaching bolts to specification.
7. Install the reverse idler gear in the case with the larger gear toward the rear of the case. Coat the rear of the reverse idler gear shaft with sealer before installing the retainer. Press idler shaft into position. Secure the idler shaft retainer with a bolt.
8. Position the output shaft assembly in the case.
9. Place a wood block in the front of the case as shown in Fig. 11. Drive the bearing onto the rear of the output shaft while holding the front of the shaft against the block.
10. Install the rear extension housing on the transmission. Do not install the yoke until the output shaft end play has been checked. On transmissions equipped with a parking brake support, the yoke and retaining nut must be installed before the input shaft end play is checked.
11. With the cutaway portion of the clutch teeth in the downward position on the input shaft, install the gear in the case.
12. Install the input shaft bearing retainer with no gasket or capscrews.

    Using Tool T-64T-7000-A to hold the shaft and retainer concentric, measure the clearance between the retainer and the case (Fig. 12). Install a gasket shim pack 0.010 to 0.015 inch between the retainer and the case to obtain the required 0.007 to 0.017 inch input shaft end play. Tighten the front retainer bolts, then re-check the end play.

    When the input shaft end play has been established, re-check the synchronizer clearance. It should be medium 0.050 to 0.070 inch or light 0.070-0.095 inch. Adjust, if required.
13. Install the parking brake shoes.
14. Lubricate the extension housing bushing and seal and U-joint flange with ball joint grease.
15. Install the speedometer drive gear, brake companion flange, brake drum, and the flange attaching nut. Lock the transmission in gear and tighten the nut to specification.
16. Place the transmission gears in neutral.
17. Install a new gasket and the gear shift housing.
18. Fill the transmission with lubricant, through the speedometer cable attachment opening in the rear

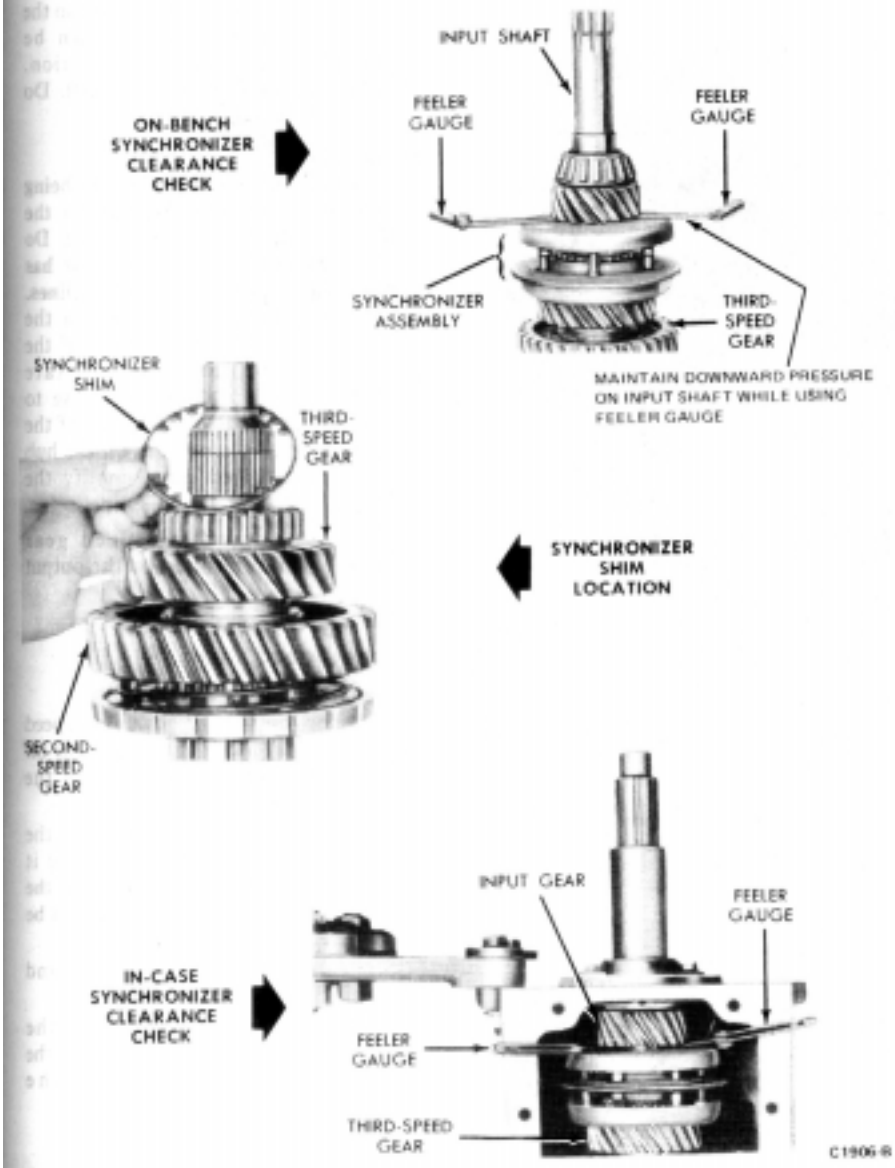

FIG. 10 Measuring Input Shaft-To-Synchronizer Clearance

bearing retainer, until the lubricant reaches the lower level of the regular filler opening (except F-250, 4x4).

SUB-ASSEMBLIES

Gearshift Housing

Disassembly

1. The gearshift housing should be disassembled only if it is necessary to replace a shift fork, shift rail, or the cover itself.
2. Slide the boot off the cap (if so equipped).
3. Using special Tool T73T-7220-A, turn the cap counterclockwise and remove the lever from the cover.
4. Remove the back-up lamp switch from the housing (Fig. 14).
5. Remove the spiral pin from the first- and second-speed shift fork and the gate with screw extractor shown in Fig. 13. To insert the screw extractor into the spiral pin, tap lightly on fabricated handle while slowly turning counterclockwise. When extractor grips the pin, stop tapping and continue turning until spiral pin is removed.
6. Push the shifter shaft out through the rear to force the plug out of the housing. Cover the detent ball access hole to prevent the ball and the spring from flying out as the shaft clears the hole. Remove the shaft fork and the gate.
7. Remove the third- and fourth-speed shifter shaft in the same manner, then the reverse shifter shaft.
8. Compress the reverse gear plunger and remove the retaining clip. Remove the plunger and the spring from the gate (Fig. 14).

Assembly

1. Assemble the spring on the reverse gear plunger (Fig. 14) and hold it in the reverse shift gate. Compress it in the gate and install the retaining clip.
2. Enter the reverse shifter shaft in the cover and place the detent spring and ball in position. Depress the ball and slide the shifter shaft over it.
3. Install the gate and the fork on the shaft. Install new spiral pins in the gate and in the fork.
4. Apply a film of sealer in the plug seat at the rear of the cover. Install a new plug in the reverse shifter shaft bore.
5. Place the reverse fork in the neutral position.
6. Install the two interlock plungers in the bores (Fig. 14).
7. Insert the interlock pin in the third- and fourth-speed shifter shaft. Install the shaft in the same manner as the reverse shifter shaft mechanism.
8. Install the first- and second-speed shifter shaft in the same manner, making sure that the interlock plunger is in place.
9. Lubricate the spherical ball seat. Position the shift lever and cap in place.
10. Install the back-up lamp switch, and tighten to specification.

Countershaft Gear Front Bearing

Disassembly

Drive the countershaft gear front bearing cage from the case, being careful not to lose any of the roller bearings. The bearing can be driven out from the outside of the case.

Assembly

Carefully press the bearing cage into the case until it is flush with the front of the case. Retain the roller bearings in the bearing cage with grease.

Countershaft Gear Rear Bearing

1. Position the transmission so the front of the case is facing downward.
2. If uncaged bearings are re-used, the loose rollers (or needles) can be held in place with suitable grease.(This is not required with the caged-type bearing used for service replacement.) Position the bearings in the cap.
3. Position the race thrust bearing and the cap. Tighten the attaching bolts to specification.

Input Shaft Bearing Race

Disassembly

Pull the bearing race from the front bearing retainer with Puller T50T-100-A and OTC-943.

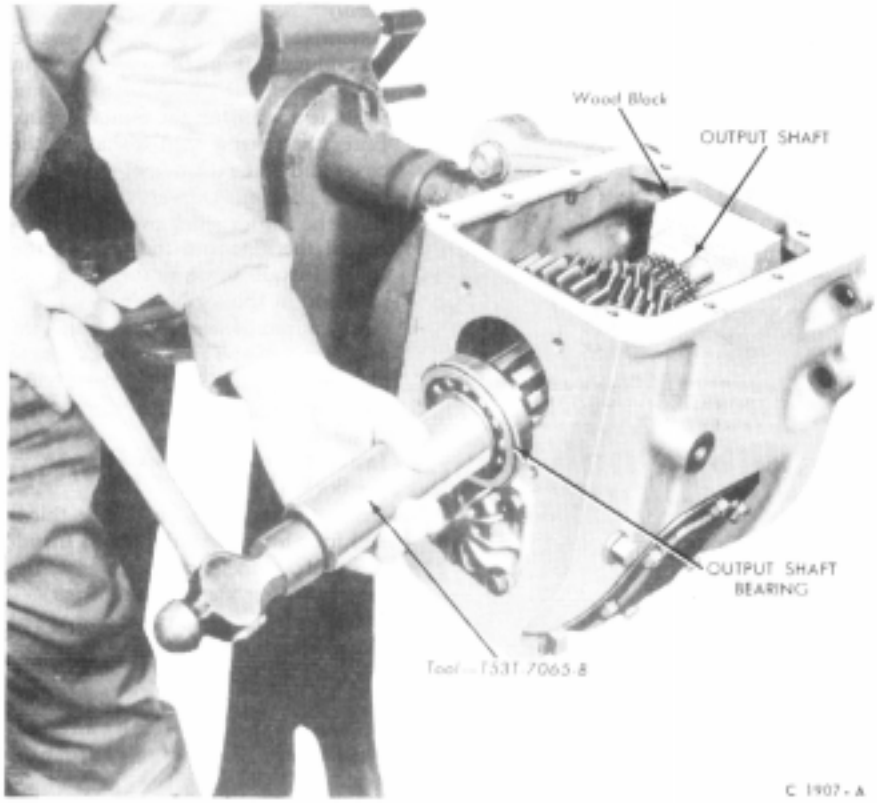

FIG. 11 Installing Output Shaft Rear Bearing

Assembly

Press a new race into the front bearing retainer with the tool shown in Fig. 15.

Input Shaft Seal

Disassembly

Pull the input shaft seal (Fig. 5) with Tool T58L-101-A and slide hammer T50T-100-A.

Assembly

Press a new seal into place in the retainer making sure that the lip of the seal is toward the mounting surface.

Input Shaft Bearing

Disassembly

Remove the tapered roller bearing from the input shaft with Tool T64T-7025-A and T54T-4625-B1.

Assembly

1. Position Tool 4261-BA in an arbor press as shown in Fig. 16. Place a wood block on the input gear and press the gear into the bearings until it contacts the bearing inner race.

Input Shaft Roller Bearings

Disassembly

1. Remove the snap ring and retaining washer from the shaft.
2. Remove the bearings from the input shaft bore.

Assembly

1. Coat the bore of the input shaft gear with a thin film of grease.
2. Install the 14 roller bearings in the bore of the input shaft. Slide the final roller axially into place. Secure the bearings with the retaining washer and the snap ring.

Reverse Idler Gear Bearings

On the F-100—F-350 and P-500 trucks and idler gear and an integral bronze bushing are used (Fig. 5). For service replacement of the reverse idler gear on these models, the gear and roller bearings are to be used as on other models. The service reverse idler gear and bearings are serviced only as an assembly. Once the bearing lock ring snaps into place, it cannot be removed without destroying either the gear or the bearing.

First Speed Gear

Disassembly

1. Remove both the sliding first-speed gear and the output shaft from the transmission.
2. Mark the gear and output shaft so the gear and shaft splines can be assembled in the same position. Remove gear from output shaft. Do not lose the spline springs.

Assembly

1. **If a new gear and/or shaft is being installed, select-fit the gear to the shaft for the best sliding action. Do the same if the first-speed gear has been sticking on the shaft splines.** Position the spline springs on the coast side of the spline teeth of the first speed gear. To facilitate assembly, use a daub of grease to retain the springs on the sides of the spline teeth. Two notches on the hub of the first speed gear identify the location of the relieved splines.
2. Place the new first speed gear assembly in its position on the output shaft.

Second Speed Gear

Disassembly

1. Slide the third-speed gear, first-speed gear stop, and the first-speed gear off the output shaft. Do not lose the slider gear springs.
2. Carefully pry up on one end of the two-piece snap ring and remove it from the shaft. **If any damage to the ring results from this, it should not be re-used.**
3. Slide the second-speed gear and synchronizer brake off the shaft.
4. Remove the snap ring from the synchronizer brake pins. Separate the brake and spring from the second-speed gear.

Assembly

1. Assemble the spring and synchronizer brake to the second-speed gear. Secure the brake with the snap ring, making sure that the snap ring tangs are away from the gear.
2. Slide the second-speed gear onto the front of the output shaft, being sure that the synchronizer brake is toward the rear. Secure the gear to the shaft with the two-piece snap ring.
3. Slide the spring-loaded first-speed gear and the gear stop (Fig. 5) onto the rear of the shaft.
4. Slide the third-speed gear, synchronizer shim (if required), the third- and fourth-speed synchronizer, and the roller-type thrust bearing onto the front of the shaft.

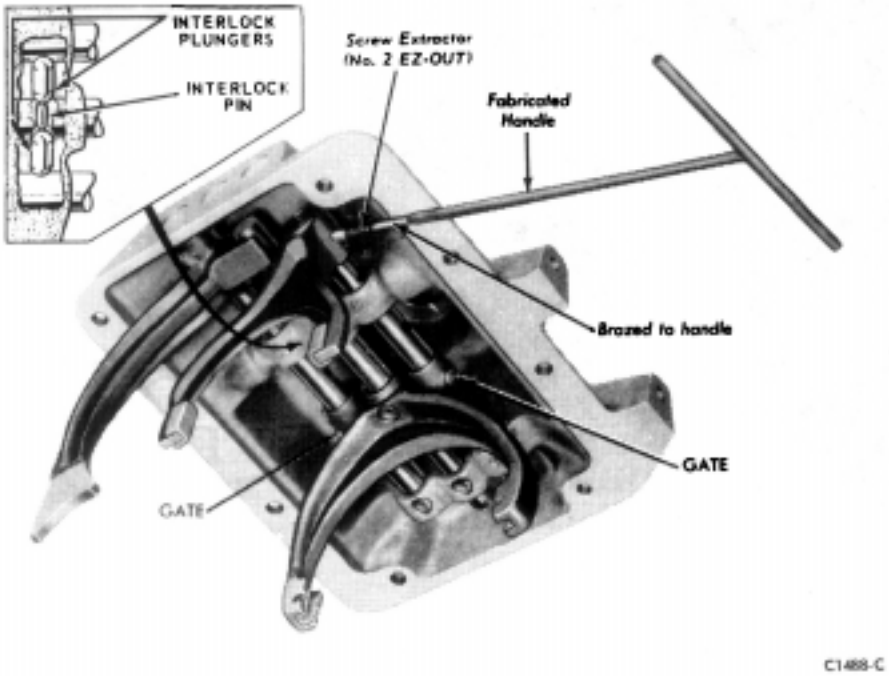

FIG. 13 Removing Shift Fork Spiral Pin

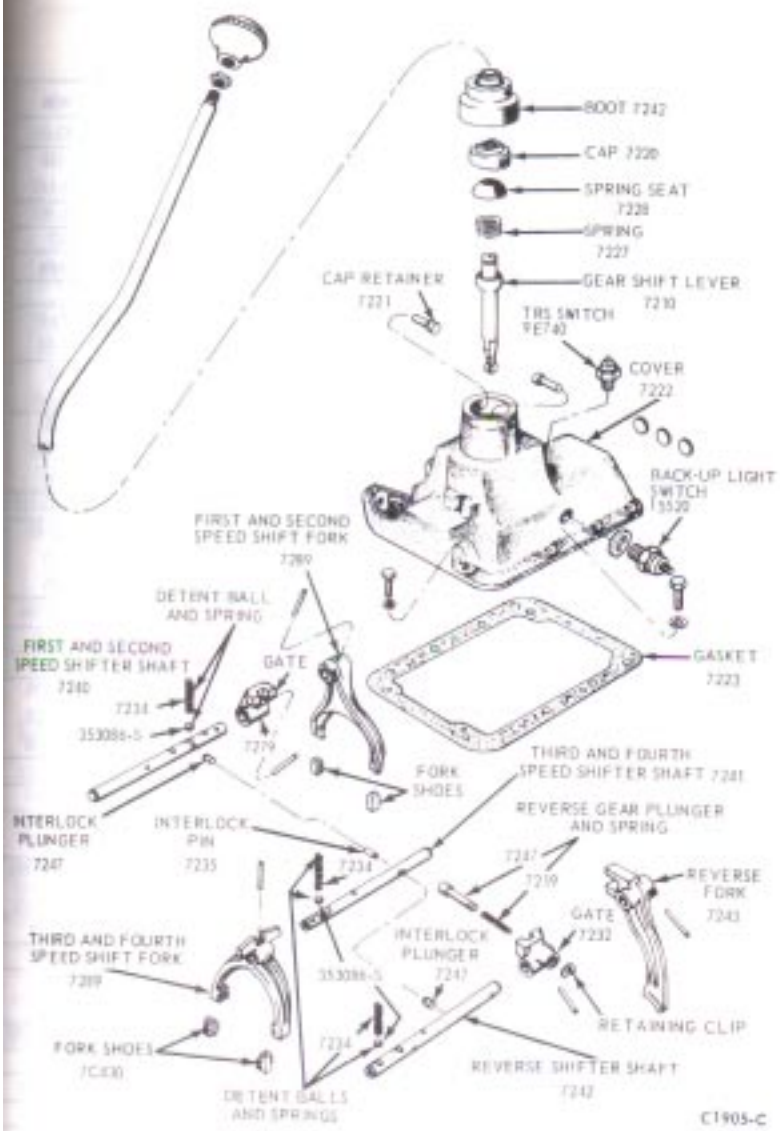

FIG. 14 Gearshift Housing Disassembled

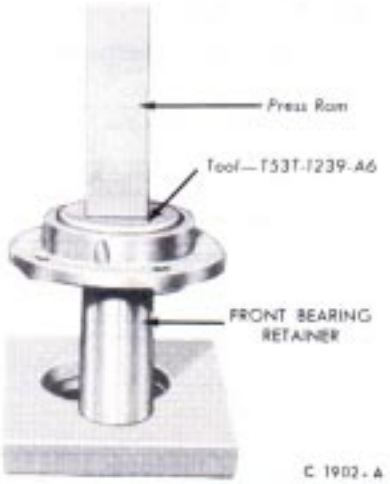

FIG. 15 Installing Front Bearing Race

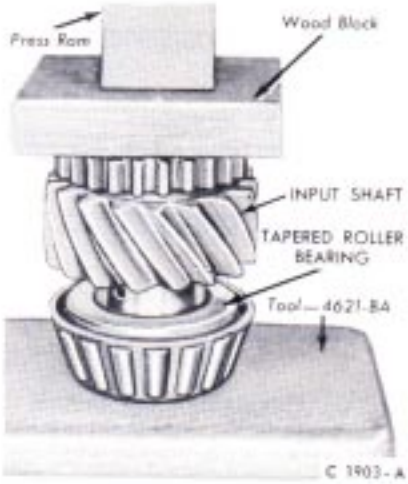

FIG. 16 Installing Input Shaft Bearing