PART 4-3— 4-Wheel Drive Front Axles— Dana Model 30-F

Section	Page
1 Description and Operation	4-33
2 In-Vehicle Adjustments and Repairs	4-35
Front Axle Shaft and Steering Knuckle Removal	4-35
Front Axle Shaft and Steering Knuckle Installation	4-35
Drive Pinion Oil Seal Removal	4-36
Drive Pinion Oil Seal Installation	4-36
Front Wheel Lock-Out Hub	4-36
Operation	4-38
Removal	4-38
Installation	4-38
3 Removal and Installation	4-38
Dana 4-Wheel Drive Front Axle	4-38
Removal	4-38
Installation	4-38
4 Major Repair Operations	4-40
Disassembly	4-40
Assembly of Conventional Differential	4-41
Differential Bearing End Play Measurement — Conventional and Limited-Slip Differentials	4-47
Drive Pinion Installation and Depth Adjustment	4-42
Differential Bearing Pre-Load and Ring Gear Backlash Adjustment — Conventional and Limited-Slip Differentials	4-44

1 DESCRIPTION AND OPERATION

DANA DESIGN FRONT 4-WHEEL DRIVE AXLE

A unique front wheel drive axle is provided on the Bronco vehicle (Fig. 1). This Dana design differs from previous axles of this type principally in the area of the spindle and spindle support section of the axle housing. A massive open yoke is welded to the outer ends of the axle housing, replacing the closed spherical joint commonly used in the past. This construction makes for a very strong spindle area. Power to drive the front wheels is transmitted through open Cardan-type universal joints. Pressed-in seals of a common type are used in the axle housing outer ends and in the spindle inner bore to seal out dirt and retain the lubricants. The king pin bearings are installed and serviced in practically the same manner as previous front wheel drive axles.

The differential section of the Dana Model 30F axle is identical in design (but not in size) to the other Dana units previously used on Ford vehicles. The differential carrier is integral with the axle housing. Adjustment of the side carrier bearings is accomplished by means of shims placed between the bearings and the differential case. The carrier side bearings are pre-loaded by the squeezing action of the housing. A spreader must be used (Fig. 9) on the axle housing to relieve the tension on the differential bearings and permit removal or installation of the differential. Pinion depth is controlled by a shim pack located to the rear of the pinion bearing. Pinion bearing preload is controlled by variable-size spacers. Where necessary, special service tools have been designed and are available to service the Dana axle used in the Bronco.

The front axle is of the integral carrier-housing, hypoid gear type, in which the centerline of the drive pinion is mounted below the centerline of the ring gear (Fig. 7).

The integral pinion gear and shaft is supported by two opposed tapered roller bearings which are assembled in the forward side of the carrier housing. Pinion locating shims, installed between the rear bearing cup and the cup seat, control the drive pinion depth adjustment. The pinion bearing preload is controlled by shims located between the pinion front bearing and the shoulder on the drive pinion shaft.

The differential case assembly is supported by two opposed tapered roller (side) bearings and cups, which are retained in the housing by removable caps. Shims, installed between each differential side bearing and the shoulder on the case, perform three functions: they take up the differential case side clearance; they adjust the backlash between ring gear and pinion; and they establish differential side bearing preload.

A cover on the rear of the carrier housing provides access for inspection, removal and installation of the differential assembly and drive pinion. A metal tag, stamped with the gear ratio plus the number of teeth on the ring gear and pinion, is secured to the housing by one of the cover bolts.

Vehicles equipped with limited-slip differential assemblies will have an additional metal tag identification attached to one of the cover bolts.

OPERATION

The rear axle drive pinion receives power from the engine through the transfer case drive shaft. The pinion gear rotates the differential case through engagement with the drive gear, which is bolted to the case outer flange. Inside the case, two different pinion gears are mounted on the differ-

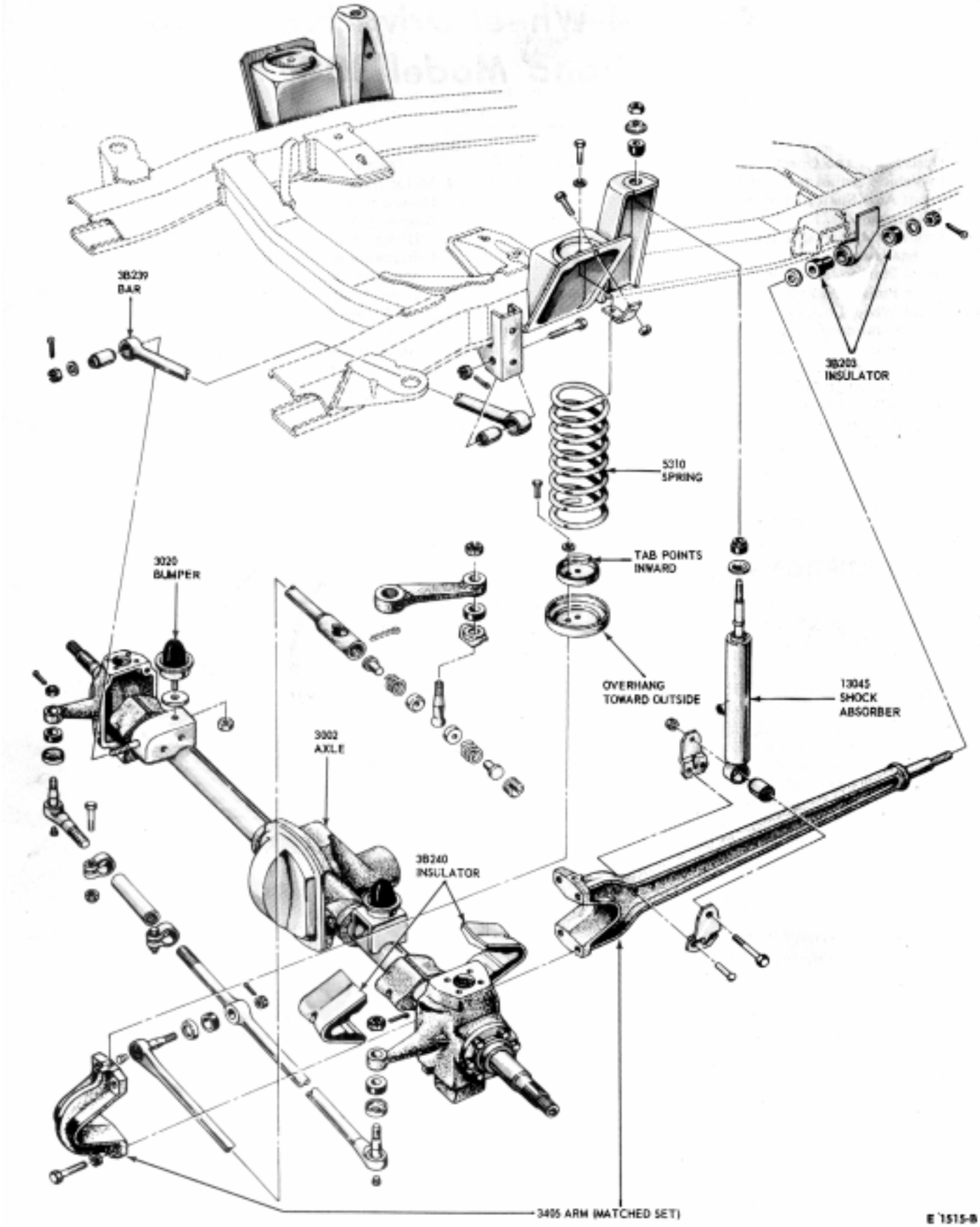

FIG. 1—4 Wheel Drive Front Axle Attaching Parts

ential pinion shaft which is pinned to the case. These pinion gears are engaged with the side gears, to which the axle shafts are splined. Therefore, as the differential case turns, it rotates the axle shafts and front wheels. When it is necessary for one wheel and axle shaft to rotate faster than the other, the faster turning side gear causes the pinions to roll on the slower turning side gear to allow differential action between the two axle shafts.

2 IN-VEHICLE ADJUSTMENTS AND REPAIRS

DANA DESIGN FRONT 4—WHEEL DRIVE AXLE

FRONT AXLE SHAFT AND STEERING KNUCKLE REMOVAL

1. Raise the vehicle on a hoist.
2. Remove the front hub grease cap. Remove the driving hub retaining snap ring and slide the splined driving hub from between the axle shaft and the wheel hub.
3. Remove the driving hub spacer. (If equipped with free-running lock-out hubs, refer to Front Wheel Drive Lock-Out Hub Removal.)
4. With tool T59T-1197-B, remove the lock nut, washer, and wheel bearing adjusting nut from the spindle. Remove the wheel, hub and drum as an assembly. The wheel outer bearing will be forced off the spindle at the same time. Remove the wheel inner bearing cone.
5. Remove the capscrews that attach the brake carrier plate and the spindle to the steering knuckle (housing). Remove the brake carrier plate and secure it one side to avoid damaging the brake hose. Carefully remove the spindle (Figs. 1 and 7).
6. Pull the axle shaft assembly from the axle housing, working the universal joint through the bore of the steering knuckle (Fig. 2). (At this point, the following parts can be replaced without further disassembly of the axle: axle shaft; universal joint; axle housing outer seal; spindle bore seal; and spindle bore roller bearing.)
7. To remove the steering knuckle (housing), disconnect the steering connecting rod end from the steering knuckle and remove the bearing caps. Remove the steering knuckle.
8. If the king pin bearings are to be replaced, refer to Figs. 3, 4 and 5.

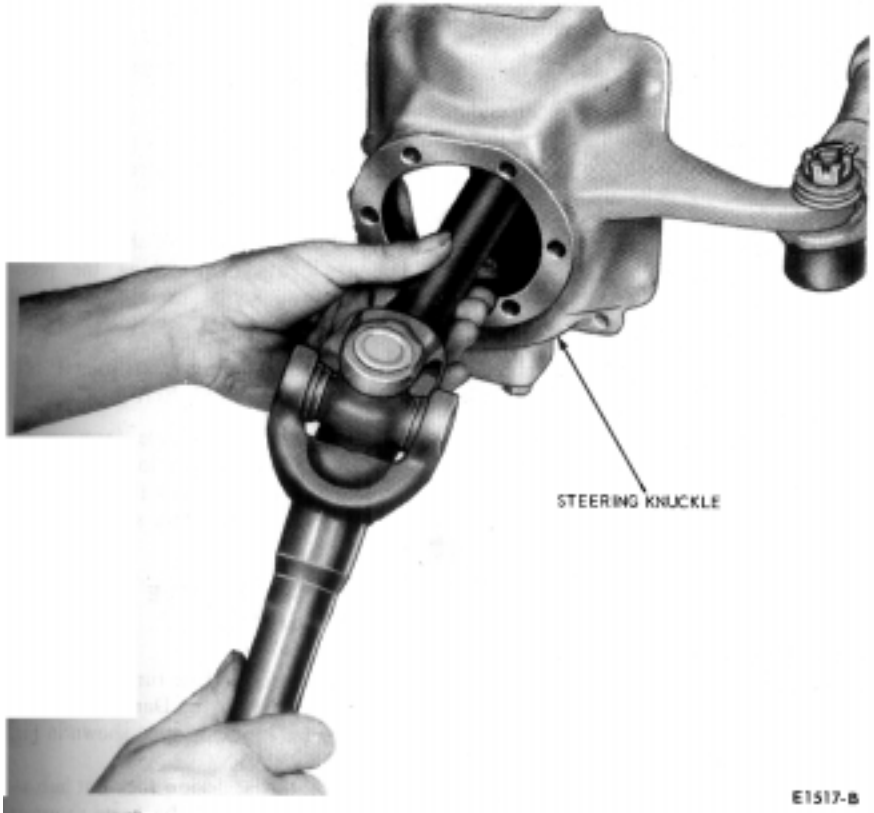

FIG. 2—Removing Axle Shaft

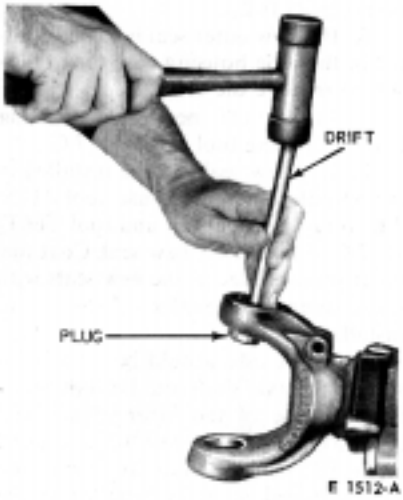

FIG. 3—Driving Out Dust Plug

9. Remove the king pin bearing inner dust caps by inserting a small-diameter drift through the bearing bore, Fig. 3 and drive the cap toward the inside of the yoke.
10. Remove the king pin bearing cup, bearing, and seal by driving on the bearing cup from inside the yoke, using a longer small-diameter drift and a suitable wrench socket (Fig. 5).

FRONT AXLE SHAFT AND STEERING KNUCKLE INSTALLATION

1. Install the king pin bearing cup in the steering knuckle bore using a suitable wrench socket. Position the bearing in the cup and install the bearing seal using a larger wrench socket or suitable seal driver. Coat the outer edge of the seal with non-hardening sealer before installation.
2. Install one bearing dust cap by means of a long drift and socket, similar to the procedure shown in Fig. 4. Install the remaining dust cap by means of a C-clamp and wood block, squeezing the cap into position.
3. If the steering knuckle was removed, position it to the axle housing and install the king pin bearings and caps, placing the shims in their original positions. Torque the attaching capscrews to specifications (25-40 ft-lb).
4. Install an in-lb torque wrench on one king pin bearing cap retaining capscrew and check the torque required

to turn the steering knuckle. Adjust this turning torque by varying the shims under the bearing caps until the turning torque (bearing preload) is the correct value (5-10 ft-lb).

5. Connect the steering connecting rod end to the steering knuckle and torque the attaching nut to specifications (25-44 ft-lb).

6. If a new outer seal is to be installed in the axle housing, use tool 1175-AB to remove the seal.

7. Install the new axle housing outer seal using tool T66T-1177-C.

8. If a new seal is to be installed in the spindle inner bore, use tool 1175-AB to remove the seal and tool T66T-1177-C to install the new seal. Coat the outer seating edge of the new seals with non-hardening sealer prior to installation.

9. Extra care should be used in inserting the axle shaft into the axle housing, because of the inner grease seal (Fig. 7). This seal seats on a ground surface of the axle shaft, as shown, and a bell-shaped guide is installed in the housing ahead of the seal to assist in piloting the shaft into the seal and the differential side gear.

10. Be sure that the roller bearing in the inner bore of the spindle is packed full of the specified lubricant (wheel bearing grease), and then slide the spindle over the axle shaft and into position on the steering knuckle.

11. Position the brake carrier plate to the spindle and install and torque the attaching bolts. Refer to the Specifications Part 4-5 for the torque values.

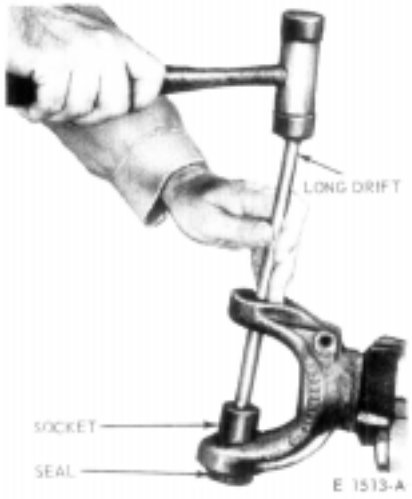

FIG. 4—Driving Out Seal and Bearing

12. Pack the front wheel bearings with the specified lubricant, if required. Position the wheel bearing inner cone and install the wheel, tire and brake drum on the spindle.

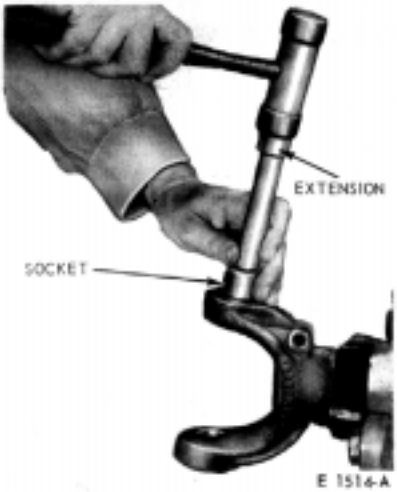

FIG. 5—Seating Bearing and/or Seal

13. Install the outer wheel bearing cone and adjusting nut. Adjust the front wheel bearings as directed below:

FRONT WHEEL BEARING ADJUSTMENT

1. Using tool T59T-1197-B and a torque wrench, tighten the bearing adjusting nut to 50 ft-lb, while rotating the wheel back and forth to seat the bearings.

2. Continue rotating the wheel and then loosen and re-torque the adjusting nut to 30-40 ft-lb.

3. Back the adjusting nut off approximately 1/2 turn (135-150°). Assemble the lock washer by turning the adjusting nut to the nearest hole where the dowel pin will enter.

4. Install the outer lock nut and torque to 50 ft-lb. Final end-play of the wheel on the spindle should be .001 to .010 inch.

5. Install the driving hub, spacer, snap ring and hub grease cap. Use a non-hardening sealer on the cap where it contacts the hub. (If equipped with free-running lock-out hubs, refer to Front Wheel Drive Lock-Out Hub Installation.)

DRIVE PINION OIL SEAL REMOVAL

The drive pinion oil seal can be replaced without removing the axle assembly from the vehicle. If the new seal is of leather construction, it must be soaked in light engine oil for 30 minutes before installation. Compounded or synthetic rubber seals do not require soaking. Apply a light coat of axle lubricant to the seal on the shaft contact area.

1. Raise the vehicle on a hoist or raise the front end of the vehicle with a jack. Install safety stands under the frame rails and lower the jack or hoist far enough to allow the axle to drop into the rebound position for working clearance.

2. Scribe marks on the companion flanges and U-joints for correct positioning at assembly, and remove the drive shaft.

3. Using tool TOOL-4851-K to hold the pinion companion flange, remove the pinion shaft nut.

4. Using tool T53T-4851-A remove the companion flange.

5. Using TOOL-1175-AB, puller, in combination with slide hammer T50T-100-A, remove the pinion oil seal.

DRIVE PINION OIL SEAL INSTALLATION

1. Clean the pinion oil seal seat. Coat the seating edge of the new seal with a small amount of oil resistant sealer. **Do not put sealer on the sealing lip.** Drive the seal into the housing, using tool T55P-5676-A.

2. Coat the inside of the pinion flange with a small quantity of lubricant and install the flange on the pinion shaft, using TOOL-4858-E.

3. Install the pinion attaching nut on the pinion shaft and torque it to 200-220 ft-lb.

4. Position the drive shaft in the original location, matching the previously-made scribe marks, and install the attaching parts.

5. Torque the universal joint U-bolt attaching nuts to 15-20 ft-lb.

6. Raise the vehicle, remove the safety stands and then lower the vehicle to road position. Check the level of axle lubricant and add the specified lubricant as necessary.

FRONT WHEEL DRIVE LOCK-OUT HUB

The optional free-running lock-out hub available for the Dana front axle is the internal locking type shown in Fig. 6.

The internal design lock-out hub assembly consists of the parts shown in Fig. 6.

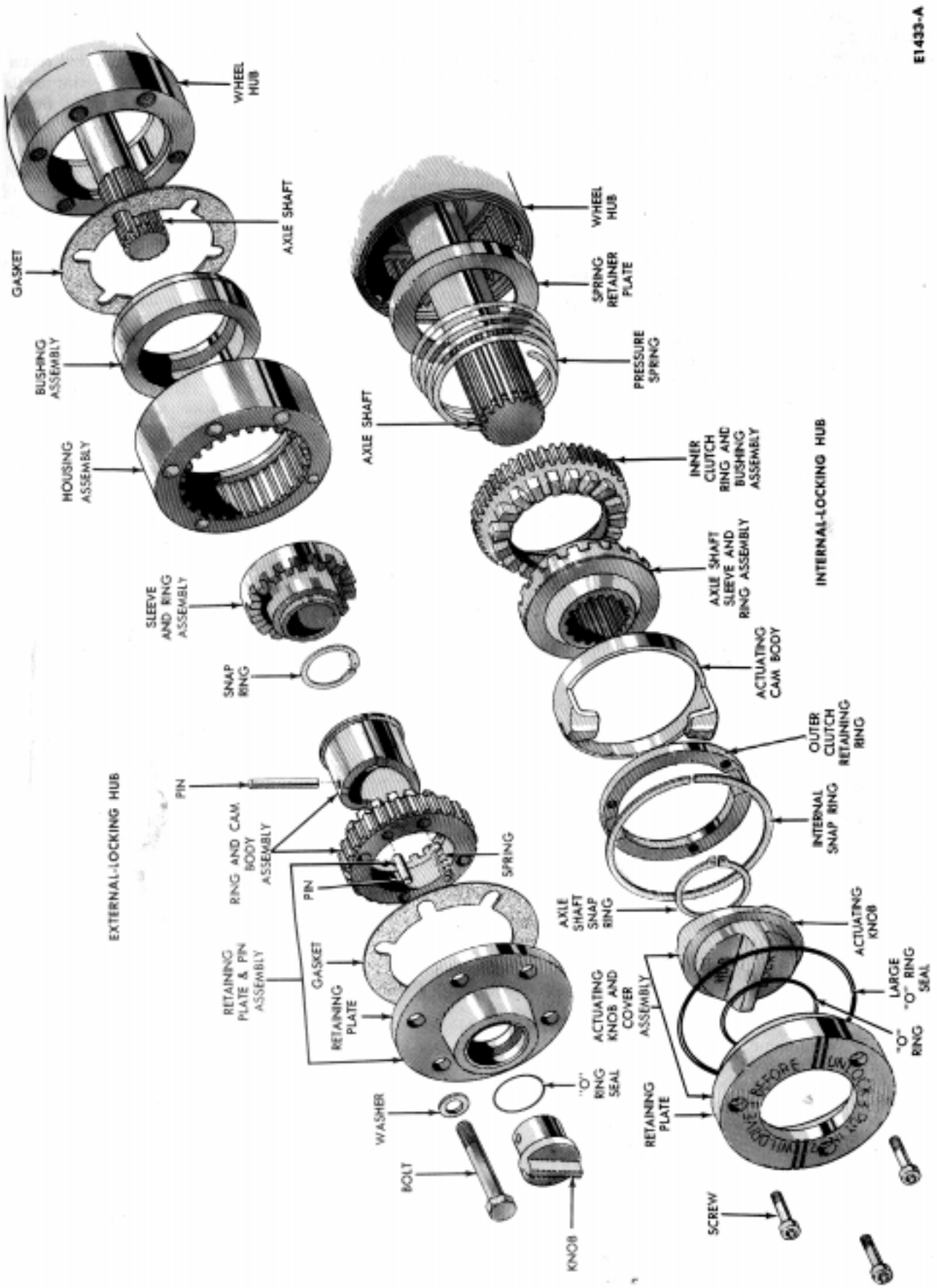

FIG. 6—Lock-Out Hub Disassembled

The splines on the OD of the inner clutch ring and the bushing assembly mesh with the inner splines of the wheel hub. The splines on the ID of the axle shaft sleeve and ring assembly mesh with the splines on the axle shaft, with **the sleeve and ring assembly being secured** to the axle shaft by a snap ring (Fig. 6). The clutch teeth on the inner clutch ring and bushing assembly mesh with the clutch teeth of the axle shaft sleeve and ring assembly to lock the axle shaft to the wheel hub forcing the axle shaft to drive the wheel hub. Disengagement of the large teeth of the inner clutch ring and bushing assembly from the large teeth of the axle shaft sleeve assembly unlocks the axle shaft from the wheel hub to allow the wheel hub to free-wheel.

OPERATION

Lock Position

When the transfer case is to be shifted into the position for driving the front axle, turn the Hub/Lok knob center bar so that it lines up with the two sets of embossed double lines on the retaining plate. If the clutch teeth do not engage with the knob turned to this position, the clutch teeth are butted and a slight movement of the wheel in either direction will complete the lock. The front axle will now drive the wheel. **Do not operate in four-wheel drive with the hubs disengaged.**

Free Wheel Position

When the transfer case is to be shifted into the position for driving the rear axle only, turn the Hub/Lok knob center bar so it lines up with the two "F"s on the retaining plate. This will disengage the clutch teeth and thus unlock the wheel hub from the axle shaft. The wheel will now turn free on the axle.

Be certain that the transfer case is shifted into 2-wheel drive position before disengaging the Hub/Lok.

REMOVAL

1. Remove the three screws attaching the lock-out actuating knob and retaining plate assembly to the wheel hub (Fig. 6). Remove the actuating knob and retaining plate assembly and large O-ring from the wheel hub.
2. Remove the large internal snap ring, the outer clutch retaining ring, and the actuating cam body from the wheel hub (Fig. 6).
3. While pressing inward against the axle shaft sleeve and ring assembly, remove the snap ring that secures the axle sleeve and ring assembly to the axle shaft (Fig. 6).
4. Remove the axle shaft sleeve and ring assembly and the inner clutch and bushing assembly from the axle shaft.
5. Remove the pressure spring and spring retainer plate from the wheel hub.

INSTALLATION

1. Insert the spring retainer plate into the wheel hub with the flange side facing inward (Fig. 6). Be sure spring retainer plate bottoms against the outer wheel hub bearing cup.
2. Position the pressure spring, with the large end seating against the spring retainer plate, inside the wheel hub.
3. Assemble the inner clutch ring and bushing assembly to the axle shaft sleeve and ring assembly, sliding both assemblies as a unit onto the axle shaft splines. Using a NEW axle shaft snap ring, lock the axle shaft sleeve and ring assembly to the axle shaft.
4. Place the actuating cam body in position against the axle shaft sleeve and ring assembly inside the wheel hub.
5. Install the outer clutch retaining ring and the internal snap ring into position in the wheel hub. Make sure the snap ring is well seated in the groove on the inside diameter of the hub.
6. Install the large O-ring seal onto the actuating knob and retaining plate assembly (Fig. 6) and place the knob and retaining plate assembly into position in the wheel hub.
7. Install the three knob and retaining plate assembly attaching screws securing the knob and retaining plate assembly to the wheel hub. Tighten the three screws securely.

3 REMOVAL AND INSTALLATION

DANA 4-WHEEL DRIVE FRONT AXLE

REMOVAL

1. Raise the vehicle on a hoist or jack and install safety stands under the radius arm brackets (Figs. 1 and 7).
2. Follow the procedure detailed in Front Axle Shaft and Steering Knuckle Removal and remove the front wheels, tires, brake drums, brake backing plates, spindles and axle shaft.
3. Remove the hydraulic brake line brackets from each end of the axle without breaking the hydraulic connection. Disengage the hydraulic lines from the axle clips. Tie the lines to the frame to keep them out of the working area.
4. Disconnect the steering tie rod at the knuckle connecting rod ends and tie it out of the working area. Disconnnect the axle stabilizer bar.
5. Disconnect the front drive shaft at the pinion companion flange and universal joint. Secure the drive shaft out of the working area.
6. Lower the vehicle onto the safety stands and place a jack under the axle to support it while disconnecting it from the radius arms.
7. Each radius arm and cap is numbered from 1 through 100 for proper assembly, since they are manufactured as matched pairs. Remove the bolts attaching the radius arms to the radius arm caps. Remove the rubber insulators and roll the axle from under the vehicle, using the jack positioned in Step 6, above.

INSTALLATION

1. Position the front drive axle under the vehicle, using a floor jack, and install the radius arms, insulators and caps to the axle. The numbers enscribed on cap and arm should agree and be matched together. Torque the attaching bolts to specifications, tightening them diagonally in pairs.
2. Raise the vehicle to working height and install the drive shaft to the pinion companion flange at the universal joint. Torque the universal joint U-bolt nuts to specifications.
3. Connect the axle stabilizer bar. Connect the steering tie rod to the steering knuckle by means of the steering connecting rod ends. Torque the attaching nuts to specifications and install cotter pins.

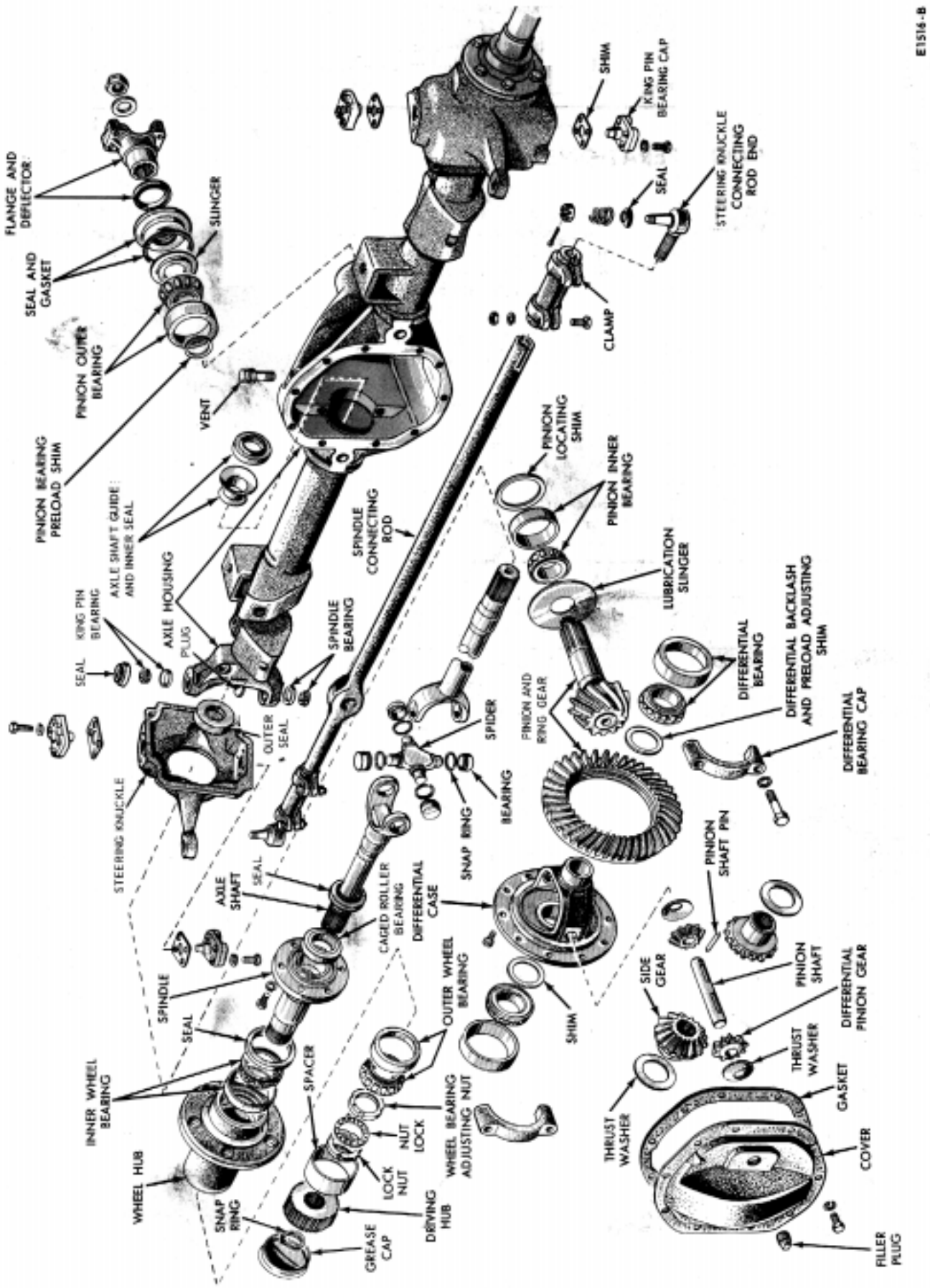

FIG. 7—Front Drive Axle Disassembled

4. Follow the procedure detailed in Front Axle Shaft and Steering Knuckle Installation and install the axle shafts, spindles and bruke carrier plates.

5. Position the hydraulic brake lines and brackets and install the retaining clips.

6. Install the front brake drums, wheels and tires. Adjust the front wheel bearings to specifications. Install the dust cap or locking hub cap and the wheel cover on each front wheel.

7. Lower the vehicle to running position and fill the axle housing with the specified lubricant.

4 MAJOR REPAIR OPERATIONS

DISASSEMBLY

1. Remove the front drive axle from the vehicle as detailed in Dana Design Front 4-Wheel Drive Axle Removal, Section 3.

2. Clean around the differential housing cover, and remove it. Remove the differential bearing caps.

3. Install the housing spreader and adapter (Fig. 9) making sure the tool hold-down clamp screws are tight. Spread the housing until the differential assembly can be forced out with a small pry bar. **Do not spread the housing more than 0.020 inch to remove the differential assembly. Loosen the spreader thread immediately after lifting out the differential assembly to prevent springing the housing.**

4. If the differential bearings are to be removed, refer to Fig. 8 for the proper tool.

A shim pack will be found behind each differential bearing cone. These shim packs control differential bearing preload and pinion and ring gear backlash. When the differential bearing cones are removed, these shim packs are usually damaged by the puller jaws and should be replaced with new shims. Measure each shim pack, shim by shim, and write down the total thickness and location of each pack.

5. Remove the ring gear from the differential case. With a punch, drive out the differential pinion shaft locking pin. Remove the differential pinion shaft, differential pinions, and thrust washers. Remove the side gears and thrust washers.

6. Seals are installed in the axle housing near the differential bearings. If these seals are to be replaced, pry them from the housing with a heavy screw driver or similar.

Use tool T66T-3002-A to replace both seals at once. Position the seals in the respective bores and insert the tool, as shown in Fig. 10. Use a wrench to expand the tool until the seals are fully seated in the bores.

7. Hold the pinion shaft flange Fig. 8 and remove the pinion shaft nut. Remove the flange Fig. 8.

8. Press the pinion shaft out of the front bearing cone. This may be done with a press or with a tool set-up such as that shown in Fig. 11.

9. Remove the pinion bearing preload shim pack from the pinion shaft or from the housing.

10. If the pinion rear bearing cone is to be replaced, use the type of tool shown in Fig. 12.

11. Attach a slide hammer puller tool (Fig. 8) to the pinion outer bearing cone and remove the bearing cone, slinger, and oil seal from the housing.

12. If the pinion bearing cups are to be replaced or the rear bearing cup removed for shim adjustment, refer to Fig. 8 for the proper remover tools.

13. Clean and inspect the axle parts as detailed in Part 4-1, Section 3.

TOOL NAME	TOOL NUMBER
Housing Spreader	TOOL-4000-C plus T66T-4000-A Adapter
Differential Bearing Remover	OTC-630-4 T57L-4220-A4
Differential Bearing Replacer	T53T-4621-C
Pinion Flange Holder	TOOL-4851-K
Pinion Flange Remover	T56L-4851-A
Pinion Flange Seal and Outer Bearing Cone Remover	T50T-100-A plus 1175-AB
Pinion Inner Bearing Cone Remover	TOOL-4221-AJ
Pinion Inner Bearing Cone Replacer	TOOL-4621-A
Pinion Inner and Outer Bearing Cup Remover	T55P-4616-AD T57L-4221-A2
Pinion Inner and Outer Bearing Cup Replacer	T60K-4616-A
Pinion and Flange Installer	TOOL-4858-E
Pinion Depth Gauge	T66T-4020-A
Pinion Flange Seal Replacer	T55P-4676-A
Differential Seal Replacer	T66T-3002-A
Housing Outer Seal Replacer	T66T-1177-C
Housing Outer Seal Remover	T50T-100-A plus 1175-AB

E 1587 A

FIG. 8—Special Tools—Dana Axle

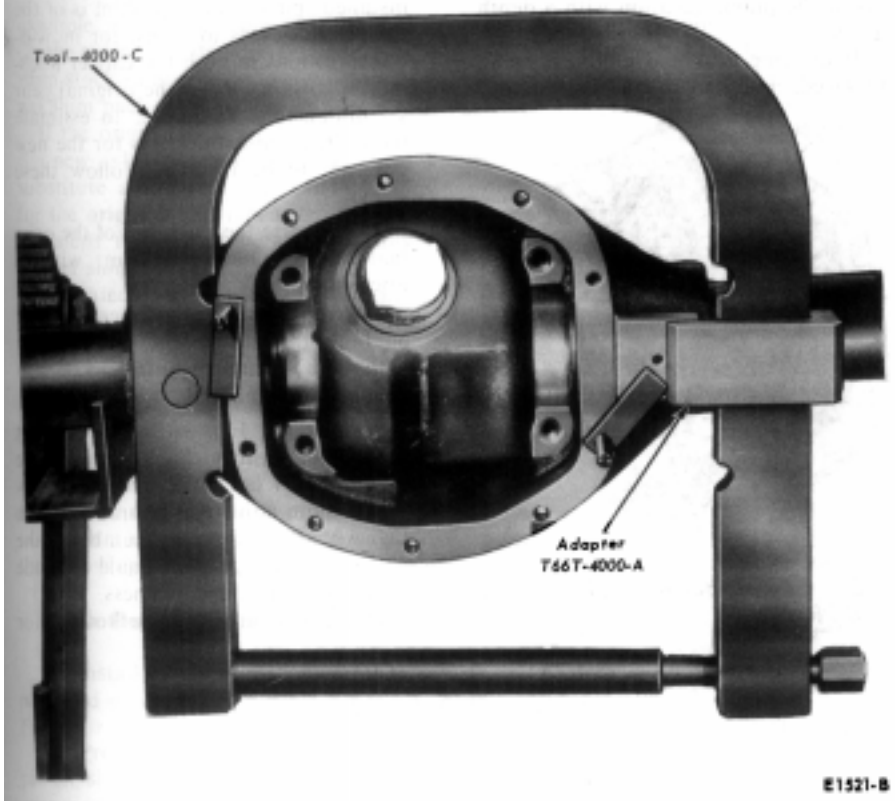

FIG. 9—Spreading Differential Housing

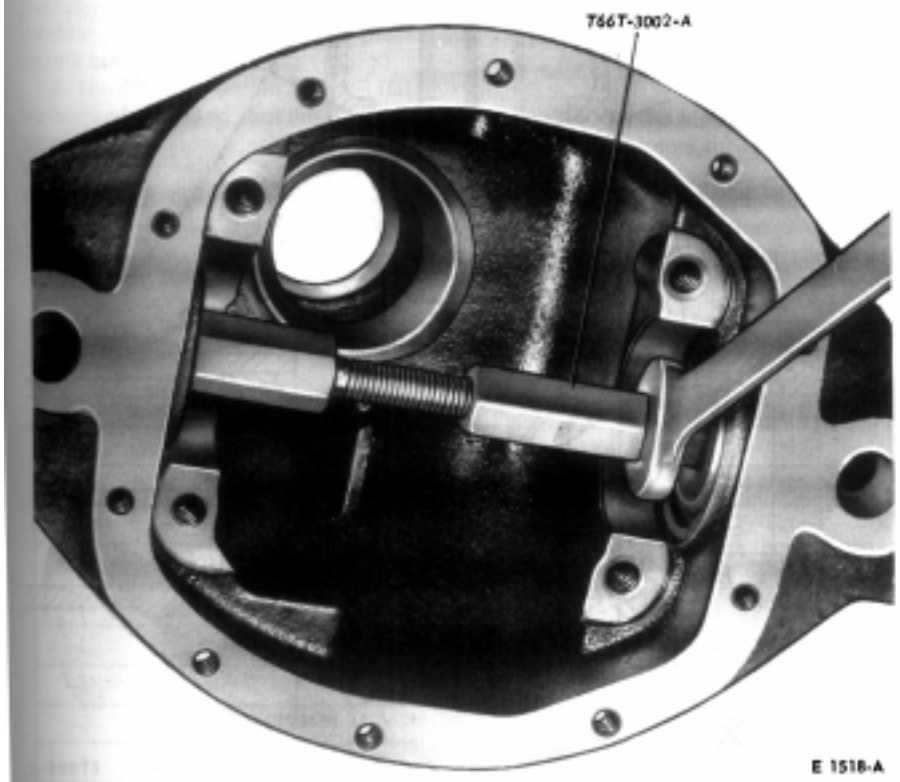

FIG. 10—Installing Inner Seals

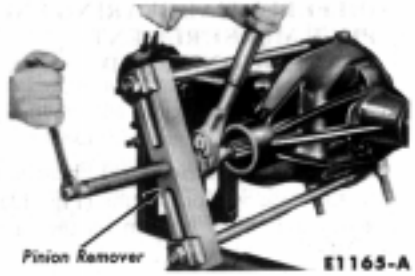

FIG. 11—Removing Pinion Shaft

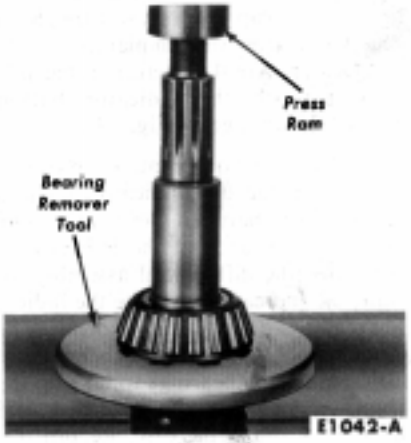

FIG. 12—Removing Pinion Bearing

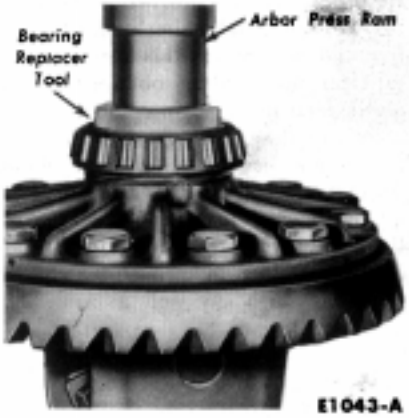

FIG. 13—Installing Differential Bearing

ASSEMBLY

CONVENTIONAL DIFFERENTIAL

1. Install the side gears and thrust washers, pinions and thrust washers, and the pinion shaft in the differential case. Install the differential shaft locking pin.

2. Install the ring gear on the differential case, and torque the attaching bolts to specifications.

DIFFERENTIAL BEARING END PLAY MEASUREMENT—CONVENTIONAL AND LIMITED-SLIP DIFFERENTIALS

1. Press the differential bearings onto the case without shims (Fig. 13). The bearings must bottom on the case shoulder.

2. Place the cups on the differential bearings and install the assembly in the housing. Install the bearing caps and tighten the cap bolts just enough to keep the bearing caps in place.

3. Mount a dial indicator on the axle housing, with the indicator button **against the ring gear (Fig. 14).**

4. Pry the differential assembly away from the dial indicator, using a screw driver between the bearing cup and the case, and set the indicator at zero. Pry the differential assembly toward the indicator and note the indicator reading. This reading indicates the amount of shims needed behind the differential side bearings to take up the **total clearance between the differential** bearing cups and the case. Record this reading.

5. Remove the bearing caps and lift the differential assembly from the housing. **Do not install shims under the differential bearings at this time.** The total-clearance reading obtained in the above step must be integrated with a second reading to be obtained after the pinion has been installed and pinion depth has been adjusted. The two readings are used to calculate the shim thickness necessary to obtain proper differential bearing pre-load and ring gear back-lash, as well as end play adjustment.

DRIVE PINION INSTALLATION AND DEPTH ADJUSTMENT

As in all other axles, two separate adjustments affect pinion and ring gear tooth contact, they are pinion depth (location) and backlash. On all other truck axles, the locating shim pack is installed between the pinion retainer and the carrier. On Dana axles, the pinion locating shim pack is installed between the pinion rear bearing cup and the carrier housing (Fig. 15). Therefore, **adding** shims moves the pinion **toward** the ring gear; **removing** shims moves the pinion **away** from the ring gear.

Estimated Shim Pack. If the original gear set is being installed, install the pinion with the original shim pack and check the pinion location with a depth gauge.

If the ring gear and pinion is being replaced, note that the original factory installed pinion locating shim is of the correct thickness to adjust for individual variations in both the carrier housing dimension and in the original gear set dimension. Therefore, to estimate the correct shim thickness for the new gear set to be installed, follow these steps:

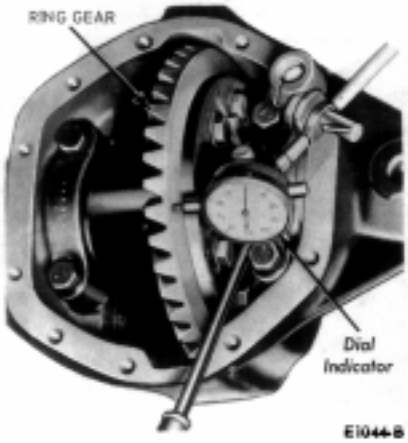

FIG. 14—Checking Differential End Play

1. Measure the thickness of the original pinion locating shim with a micrometer.

2. Note the shim adjustment number on both the old pinion and the new pinion. Each pinion gear is marked with an adjustment number.

3. Refer to Fig. 16 for the correct amount of shim thickness change. The amount that is shown under the new pinion shim adjustment number and in line with the old pinion number is the amount of **change** that should be made to the **original** shim thickness.

If the old pinion is marked **+4,** for

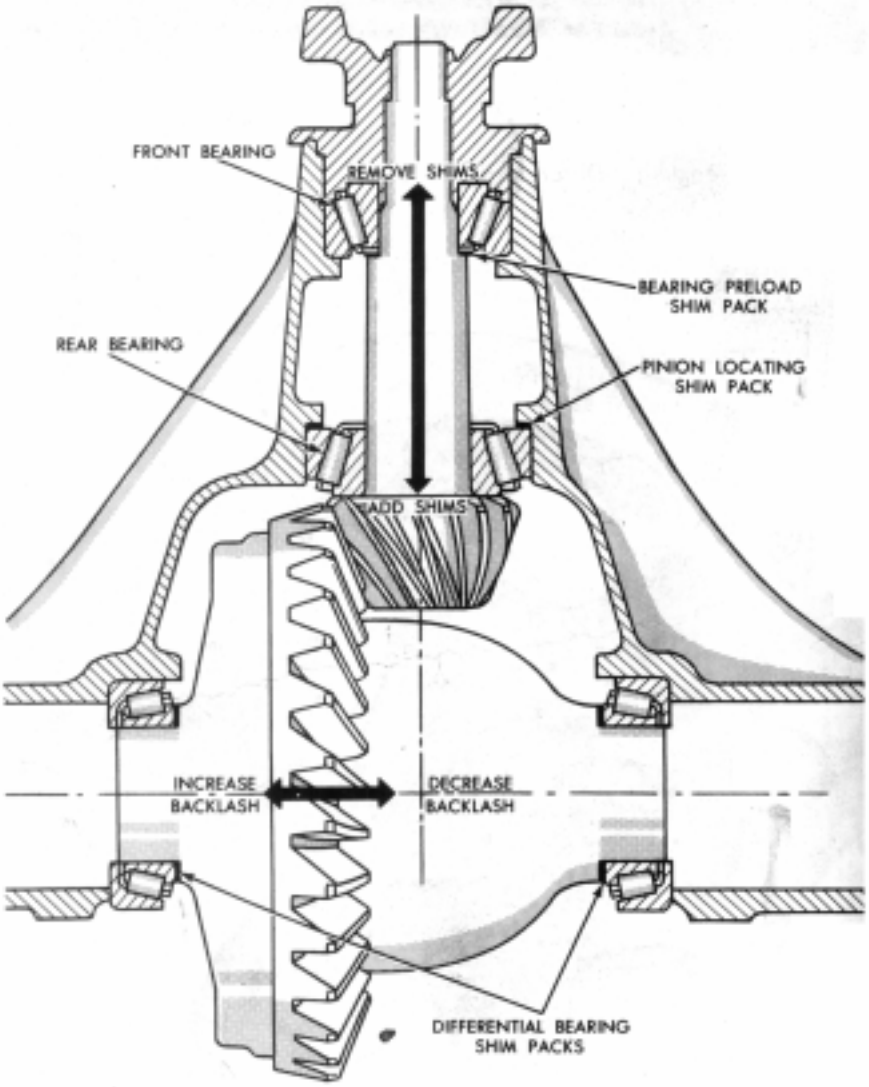

FIG. 15—Pinion and Ring Gear Tooth Contact Adjustments

example, and the new pinion is marked -2, the table indicates that 0.006 inch of shim stock should be added to the original shim pack.

If the original shim pack was lost or if a new axle housing is being installed, substitute a **nominal** 0.030 inch shim for the **original**, and repeat the foregoing steps for a trial build-up. If any further shim change is necessary, it will be indicated in the depth gauge check.

A new ring gear and pinion should always be installed in an axle as a matched set (never separately). **Be sure that the same matching number appears on both the drive pinion and the ring gear.**

Install the pinion with the estimated shim pack, and check the pinion location with a depth gauge as outlined in the following procedure.

Depth Gauge Check

1. Install the pinion locating shim pack and pinion bearing cups. Refer to Fig. 8 for the proper tool.

2. Press the rear bearing onto the pinion shaft. Refer to Fig. 8 for the proper tool.

3. Position the pinion and rear bearing assembly by inserting it from the inner side of the axle housing. Position the front bearing cone (without preload shim pack) and the universal joint flange on the pinion shaft. Press all these parts into place under a press or with a flange replacer tool (Fig. 8).

4. Install the pinion shaft flat washer and nut, and carefully torque the nut until pinion bearing preload is between 10-30 in-lbs. As the nut is torqued, rotate the pinion shaft in both directions to seat the bearing rollers.

5. Check the pinion bearing preload (Fig. 17). Disregard the torque required to start the pinion rotating. The specified torque of 10 to 30 in-lbs refers to the torque required to keep the pinion rotating after it has been started.

With the pinion installed in the housing and the bearing preload within limits, check the depth setting (actual assembly dimension) with the gauge shown in Fig. 18.

Place the gauge shaft and discs in the differential bearing pockets and securely tighten the bearing caps.

FIG. 17—Checking Pinion Bearing Preload

6. Attach the dial indicator to its holder and place it on the gauge block. Place the gauge block squarely on the pinion gear and squarely against the gauge shaft.

7. With the indicator button resting on the flat of the gauge block, set the dial face to read zero. Swing the indicator (fig. 18) to the highest point on the gauge shaft and note the reading at the highest point. **The highest point on the gauge shaft is the point of highest indicator reading while the indicator hand is moving clockwise. When the hand reverses and starts moving counterclockwise, the highest point has been passed.**

The indicator reading at the highest point on the gauge shaft shows the actual assembly dimension with reference to the nominal assembly dimension. The nominal assembly dimensions for this axle is 2.250 inches. The nominal dimension is the distance from the ground surface on the pinion gear rear face to the center line of the ring gear. The highest point on the installed gauge shaft is exactly 1/2 inch higher than the ring gear centerline. The installed gauge block height is exactly 1/2 inch greater than the nominal assembly dimensions for the axle.

When the gauge block is resting on a zero-marked pinion installed exactly at the nominal assembly dimension, the top of the gauge block and the highest point on the gauge shaft are exactly the same distance from the pinion gear rear face. In this case, the indicator, having been set at zero on the gauge block, will read zero when moved to the highest point on the gauge shaft. A plus or minus reading on the indicator at the highest point on the gauge shaft indicates, therefore, that the actual assembly dimension is not the same as the nominal assembly dimension. The plus and minus indicator readings are translated directly into plus and minus variations from the nominal assembly dimension.

The indicator reading at the highest point on the gauge shaft must correspond with the pinion gear marking, if the actual assembly dimension is correct. For example, a pinion marked minus (-) 3 is installed at the proper depth when the indicator reads minus (-) 3 at the highest point on the gauge shaft. Likewise, a pinion marked plus (+) 3 is installed at the proper depth

Old Pinion Marking	New Pinion Marking								
	–4	–3	–2	–1	0	+1	+2	+3	+4
+4	+0.008	+0.007	+0.006	+0.005	+0.004	+0.003	+0.002	+0.001	0
+3	+0.007	+0.006	+0.005	+0.004	+0.003	+0.002	+0.001	0	–0.001
+2	+0.006	+0.005	+0.004	+0.003	+0.002	+0.001	0	–0.001	–0.002
+1	+0.005	+0.004	+0.003	+0.002	+0.001	0	–0.001	–0.002	–0.003
0	+0.004	+0.003	+0.002	+0.001	0	–0.001	–0.002	–0.003	–0.004
–1	+0.003	+0.002	+0.001	0	–0.001	–0.002	–0.003	–0.004	–0.005
–2	+0.002	+0.001	0	–0.001	–0.002	–0.003	–0.004	–0.005	–0.006
–3	+0.001	0	–0.001	–0.002	–0.003	–0.004	–0.005	–0.006	–0.007
–4	0	–0.001	–0.002	–0.003	–0.004	–0.005	–0.006	–0.007	–0.008

E1586-A

FIG. 16—Drive Pinion Adjusting Shim Thickness Changes (Inch)—Dana

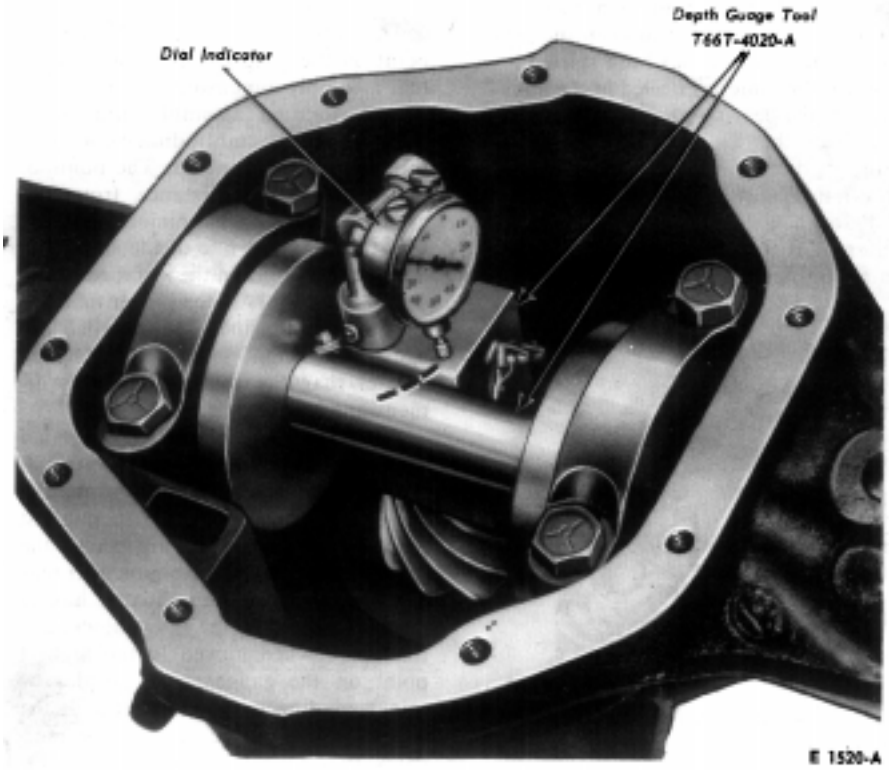

FIG. 18—Checking Pinion Depth

when the indicator reads plus (+)3 at the highest point on the gauge shaft.

A plus (+) reading (clockwise from zero) at the highest point on the gauge shaft with a zero-marked pinion, means that the actual assembly dimension is too great in the amount of the plus (+) reading. To correct, add shims in thousandths of an inch that correspond to the plus reading. For example, an indicator reading of plus (+)10 with a zero-marked pinion means that 0.010 inch in shims must be added to the rear bearing cup pack. The addition of shims will move the pinion gear closer to the ring gear and decrease the actual assembly dimension (Fig. 15).

Likewise, a minus (-) reading (counterclockwise from zero) at the highest point on the gauge shaft with a zero-marked pinion, means that the actual assembly dimension is deficient in the amount of the minus (-) reading. To correct, remove shims in thousandths of **an inch equal to the minus reading. This will increase the actual assembly dimension.**

Whenever the pinion rear bearing cup shim pack is changed, install the pinion and recheck the pinion depth.

8. After the pinion depth has been adjusted and checked, remove the universal joint flange and front bearing. Add or subtract from the original front pinion bearing preload shim pack, the same amount in thousandths of an inch that was added or subtracted from the shim pack behind the rear bearing cup (Fig. 15). Install the bearing preload shim pack, the outer bearing, the universal joint flange, washer and nut. Torque the flange nut to 200-220 ft-lbs on all models.

9. Check the pinion bearing preload (Fig. 17). The preload should be 10-30 inch-pounds. Add shims to decrease preload and remove shims to increase preload.

If the original bearing preload shim pack has been lost or there is reason to believe that it was not correct, install a 0.065-inch shim pack for a trial build-up. Check the pinion bearing preload and adjust as necessary to obtain 24-40 in-lbs preload on new bearings or 10-25 in-lbs on used bearings.

10. When the pinion bearing preload is correct, remove the universal joint flange. Install the oil slinger on the outer side of the front pinion bearing and install the oil seal. Refer to Fig. 8 for the proper seal installer tool. Soak the new oil seal in light engine oil for 30 minutes before installation.

DIFFERENTIAL BEARING PRELOAD AND RING GEAR BACKLASH ADJUSTMENT—CONVENTIONAL AND LIMITED-SLIP DIFFERENTIALS

1. Refer to the reading taken in step 4 under Differential Bearing End Play Measurement—Conventional and Limited-Slip Differentials. This reading (taken before the pinion was installed) represents the total clearance between the differential side bearing cups and the case.

2. Again install the differential assembly in the housing (this time with the pinion installed), and tighten the bearing caps lightly. Install the dial indicator with the button against the back face of the ring gear. Move the differential and ring gear assembly tight against the pinion gear and then set the dial indicator to zero. Move the differential and drive gear assembly toward the indicator, and note the reading.

3. This reading indicates the amount of shims necessary to take up the clearance between the bearing cup and the case at the ring gear side of the differential assembly. Subtract this reading from the previously recorded total reading to obtain the amount of shims necessary to take up the clearance between the bearing cup and the case at the pinion side of the differential. Increase this pinion-side shim pack by an additional 0.015 to 0.020 inch in order to provide correct bearing preload and backlash.

EXAMPLE (Fig. 19):

Total Clearance previously recorded	0.070 inch
Less reading in foregoing step 2 (Amount of shims necessary to take up clearance at ring gear side)	0.038 inch
Shims necessary to take up clearance at pinion side—	0.032 inch
Plus 0.017 inch shims for preload and backlash	0.015 inch
Total amount of shims at pinion side	0.047 inch

4. Remove the bearing caps, and lift the differential assembly from the housing. Remove the differential side bearings, and install the proper amount of shims on each side of the differential case. Press the side bearings onto the case until they are firmly seated against the shims.

5. Install the housing spreader, spread the housing not more that 0.020

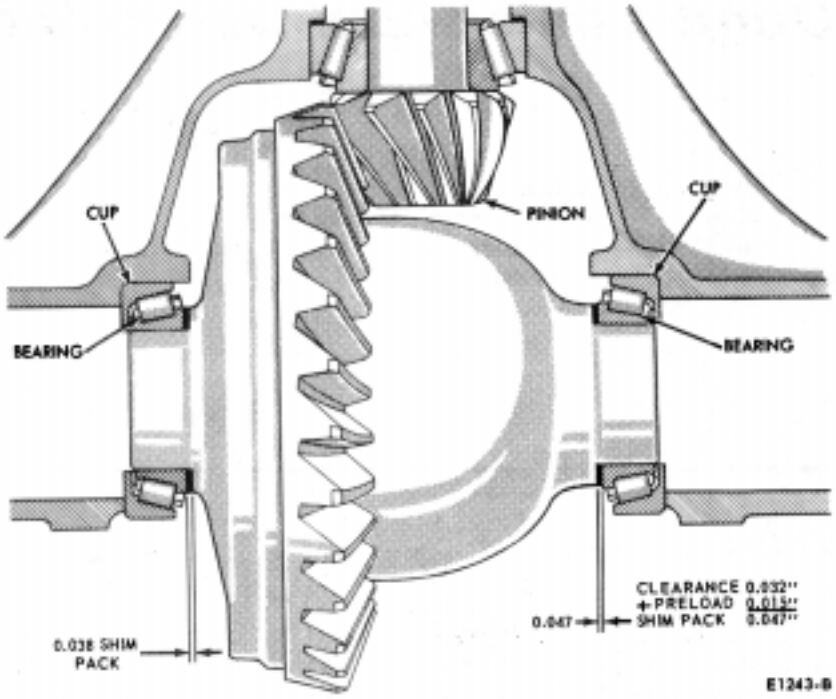

FIG. 19—Differential Bearing Preload and Ring Gear Backlash Adjustment

inch, and install the differential assembly. Install the bearing caps, and remove the spreader. Install and torque the cap bolts to specification.

6. Install a dial indicator to check the backlash at four equally spaced points around the ring gear. The backlash must be held to .004-.009 inch and cannot vary more than 0.002 inch between positions checked. If the backlash does not fall within these specifications, change the shim packs behind both differential side bearings, as required.

7. Check gear tooth contact pattern as given in Fig. 4 in Part 4-1.

8. Position a new gasket on the rear face of the axle housing, and install the rear cover and ratio identification tag. Torque the cap screws to 15-25 ft-lbs.

9. Install the axle in the vehicle according to the instructions in Dana Design Front 4-Wheel Drive Axle Installation, Part 4-3, Section 2.