PART 4-2— Rear Axles

Section	Page
1 Description and Operation	4-12
Identification	4-12
Conventional Axle	4-12
Limited Slip Differential Axle	4-12
2 In-Vehicle Adjustments and Repairs	4-13
Rear Axle Shaft, Wheel Bearings and Oil Seal Replacement	4-13
Drive Pinion Oil Seal Replacement	4-14
Universal Joint Flange Replacement	4-16
3 Removal and Installation	4-17
Differential Carrier Assembly	4-17
Axle Housing	4-17
4 Major Repair Operations — Removable Carrier Type Axle	4-18
Disassembly	4-18
Removal and Disassembly of Conventional Differential Case	4-18
Removal and Disassembly of Limited-Slip Differential Case	4-19
Removal and Disassembly of Drive Pinion and Bearing Retainer	4-19
Parts Repair or Replacement	4-20
Pilot Bearing	4-20
Pinion Bearing Cups	4-20
Drive Pinion and Ring Gear Set	4-20
Differential Case Bearings and Ring Gear	4-21
Assembly	4-21
Assembly and Installation of Drive Pinion and Bearing Retainer	4-21
Assembly and Installation of Conventional Differential Case	4-22
Assembly and Installation of Limited-Slip Differential Case	4-23
Limited-Slip Clutch Plate Installation	4-24

1 DESCRIPTION AND OPERATION

IDENTIFICATION

A metal tag stamped with the model designation and gear ratio is secured to all Ford-produced axles under one of the carrier-to-housing bolts. The first five spaces on the top line are reserved for the model designation letters such as WEM-E1, WEN-F1 or WEV-B. These letters indicate a specific combination of the following factors: conventional or locking axle; two or four pinion differential; diameter of ring gear; small or large wheel bearings; and the gear ratio. It is important, therefore, to use the model designation for obtaining the correct replacement parts.

CONVENTIONAL AXLES

DESCRIPTION

The rear axle is of the banjo-housing, hypoid gear type, in which the centerline of the pinion is mounted below the centerline of the ring gear (Fig. 1).

The pinion gear and the pinion bearings are assembled in a pinion retainer, which is bolted to the carrier. In this axle, the pinion is straddle mounted: that is, the pinion is supported by bearings both in front of and to the rear of the pinion gear. Two opposed tapered roller bearings support the pinion shaft in front of the pinion gear. A straight roller (pilot) bearing supports the pinion shaft at the rear of the pinion gear.

The differential assembly is mounted on two opposed tapered roller bearings, which are retained in the carrier by removable caps. The entire carrier assembly is bolted to the axle housing.

Ball bearings (rear wheel bearings) are pressed onto the outer ends of the axle shafts and set in the outer ends of the axle housing. These bearings support the semi-floating axle shafts at the outer ends. The inner ends of the shafts spline to the differential side gears. Bearing retainer plates hold the shafts in the housing. The left and right axle shafts are not interchangeable, because the left axle is shorter than the right.

OPERATION

The rear axle drive pinion receives its power from the engine through the transmission and drive shaft. The pinion gear rotates the differential case through engagement with the ring gear, which is bolted to the case outer flange. Inside the case of the removable carrier type axle, there are two differential pinion gears mounted on the differential pinion shaft which is pinned to the case. These pinion gears are engaged with the side gears, to which the axle shafts are splined. Therefore,as the differential case turns, it rotates the axle shafts and rear wheels. When it is necessary for one wheel and axle shaft to rotate faster than the other, the faster turning side gear causes the pinions to roll on the slower turning side gear to allow differential action between the two axle shafts.

LIMITED-SLIP DIFFERENTIAL AXLE

DESCRIPTION

The axle assembly, except for the differential case and its internal components, is identical to the conventional axle.

A constant-friction locking differential, which employs automatic transmission-type clutch plates to control differential action, is available as optional equipment (Fig. 2).

Four steel clutch plates are locked into the differential cover. Three bronze, bonded clutch plates are splined to a clutch hub which, in turn,

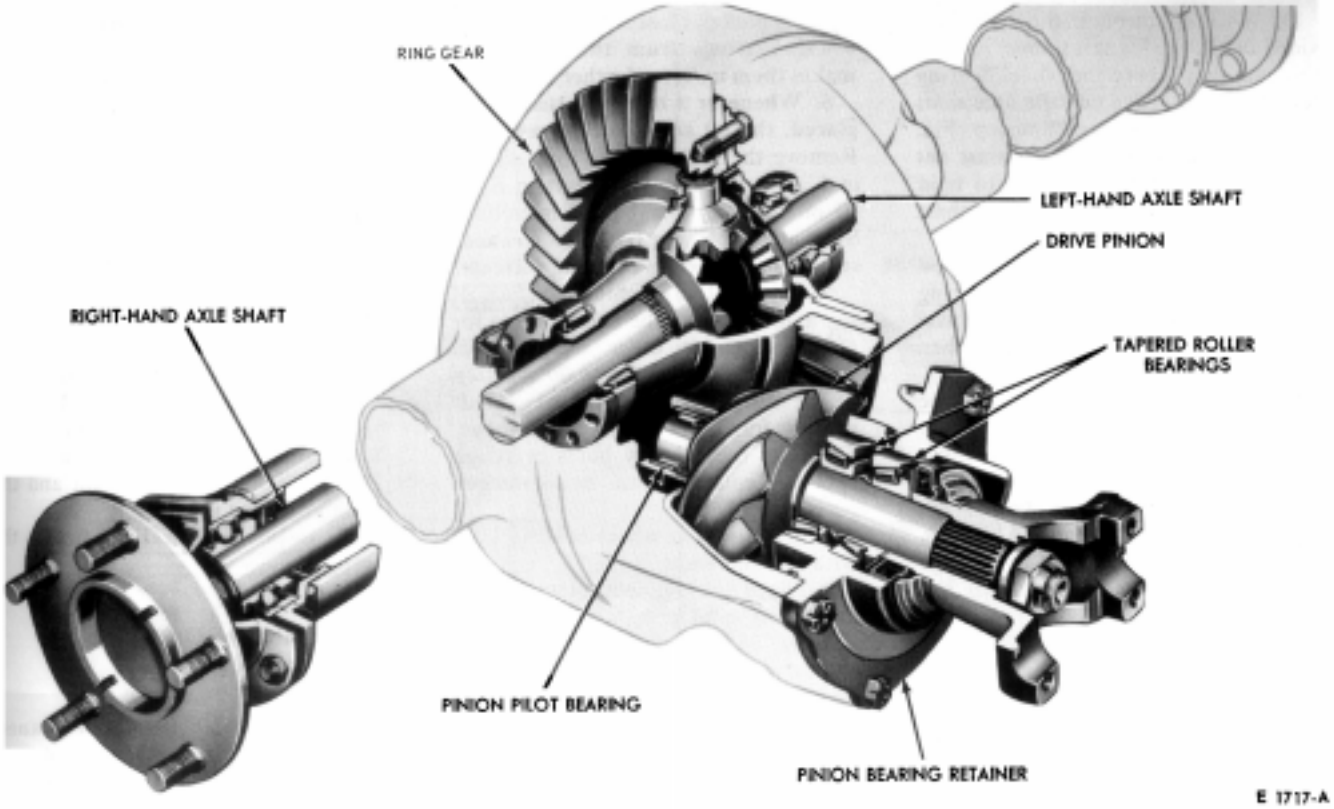

FIG. 1—Rear Axle Assembly—Removable—Carrier Type

is splined to the left axle shaft. A Belleville spring washer maintains a constant pressure between the steel and bonded clutch plates so that the clutch is always engaged.

OPERATION

The pressure between clutch plates opposes differential action at all times. When the vehicle turns a corner the clutch slips allowing a normal differential action to take place. Under adverse weather conditions, where one or both wheels may be on a low-traction surface such as snow, ice or mud, the friction between the clutch plates will transfer a portion of the usable torque to the wheel with the most traction. Thus, the wheel that is on ice or snow will not spin, but will have a tendency to operate with the opposite wheel in a combined driving effort.

When performing the following procedures, refer to Part 4-1, Section 3 for cleaning and inspection procedures.

CARE OF AXLE

The lubricant level should be checked every 6000 miles, with vehicle in normal curb attitude. The lubricant level should be at the lower edge of the filler plug hole. It is unnecessary to periodically drain the axle lubricant. The factory fill should remain in the housing for the life of the vehicle, except when repairs are made. The specified lubricant should be installed when the axle is overhauled.

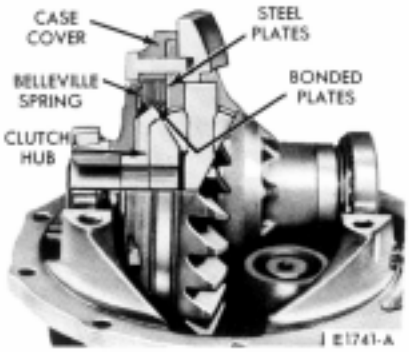

FIG. 2—Limited-Slip Differential

2 IN-VEHICLE ADJUSTMENTS AND REPAIRS

REAR AXLE SHAFT, WHEEL BEARING AND OIL SEAL REPLACEMENT

The rear axle shafts, wheel bearings and oil seal can be replaced without removing the differential assembly from the axle housing.

Synthetic wheel bearing seals are used in production only. Removal and insertion of rear axle shafts must be performed with caution. The entire length of the shaft (including spline) up to the seal journal must pass through the seal without cutting of the seal element during axle removal or installation will result in early seal failure. Leather seals only will be used as service replacement for synthetic wheel bearing seals.

1. Remove the wheel and tire from the brake drum.

2. Remove the nuts that secure the brake drum to the axle flange, and then remove the drum from the flange.

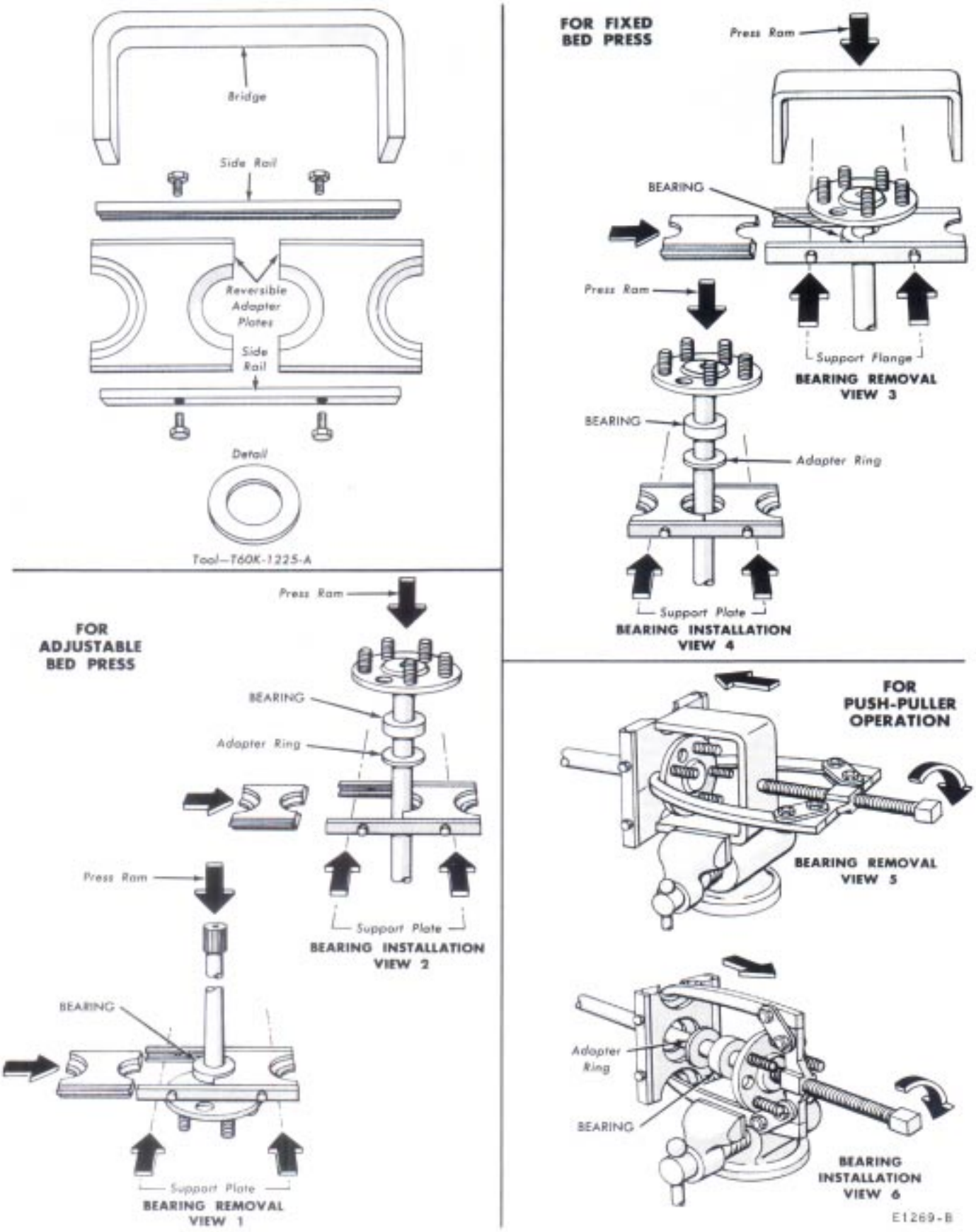

FIG. 6—Removing and Installing Rear Wheel Bearing

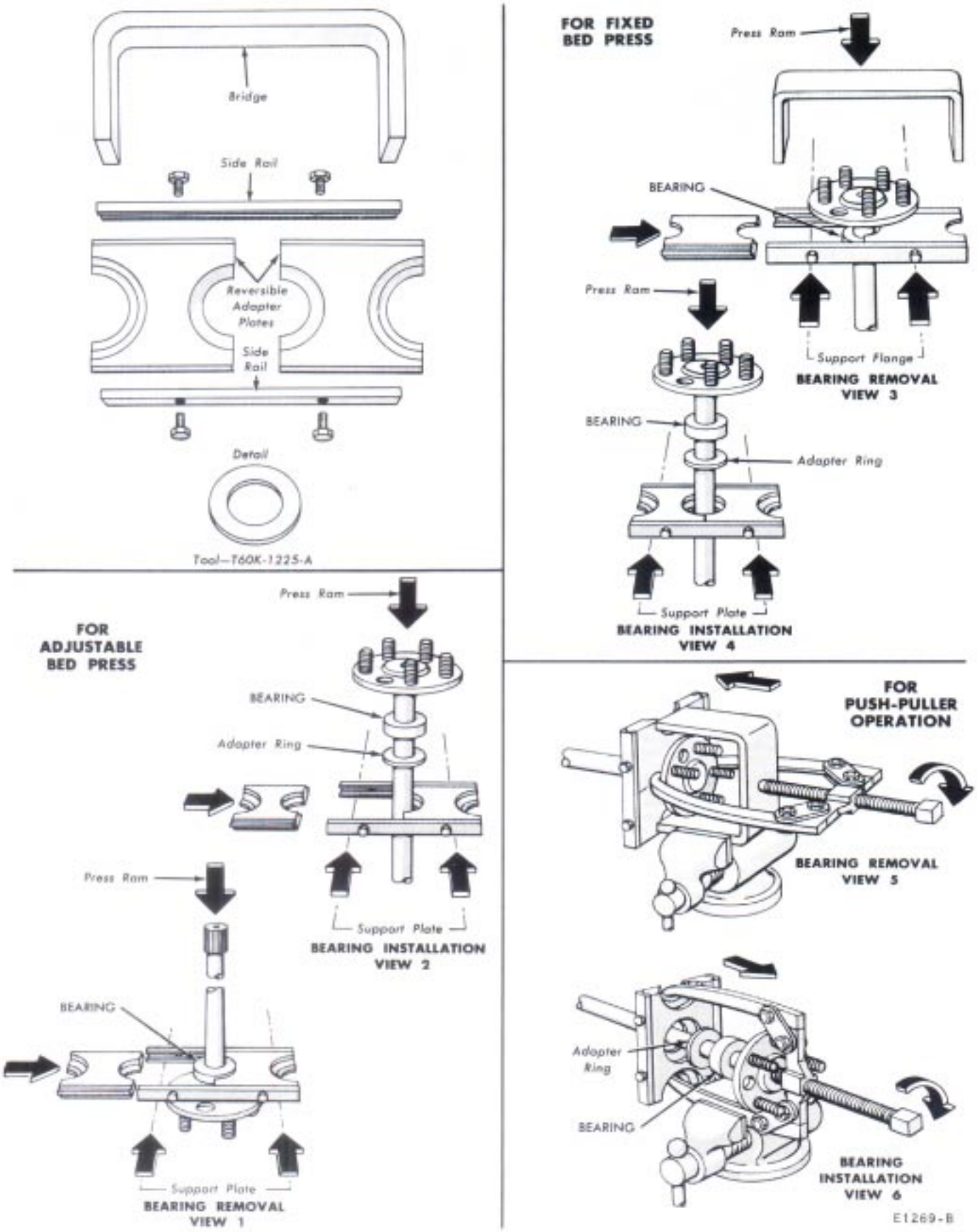

FIG. 6—Removing and Installing Rear Wheel Bearing

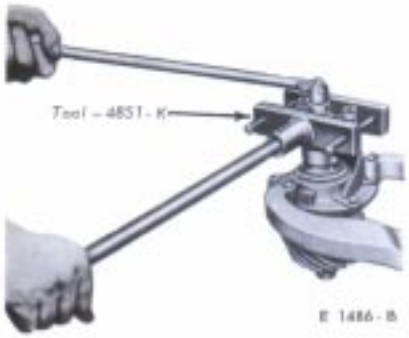

FIG. 7—**Typical Drive Pinion Shaft Nut Removal or Installation**

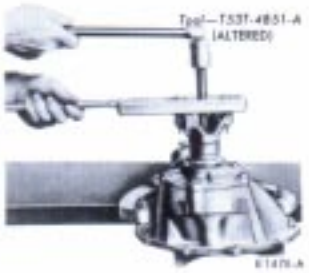

FIG. 8—**Typical Drive Pinion Flange Removal**

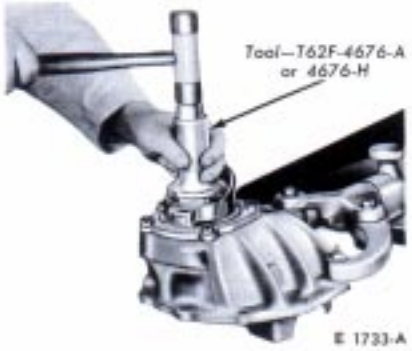

FIG. 9—**Typical Drive Pinion Flange Seal Installation**

5. Clean the pinion bearing retainer around the oil seal. Place a drain pan under the seal, or raise the front of the vehicle higher than the rear.

6. Using the tool shown in Fig. 8, remove the pinion U-joint flange.

7. Using the tool shown in Fig. 33, remove the drive pinion oil seal.

8. Clean the oil seal seat.

9. Install the seal in the retainer, using the tool shown in Fig. 9.

10. Check splines on the pinion shaft to be sure they are free of burrs. If burrs are evident, remove them by using a fine crocus cloth, working in a rotational motion. Wipe the pinion shaft clean.

11. Apply a small amount of lubricant to the U-joint splines.

12. Align the punch mark on the U-joint flange with the mark on the end of the pinion shaft, and install the flange.

13. Install a new integral nut and washer on the pinion shaft. (Apply a small amount of lubricant on the washer side of the nut).

14. Hold the flange with the tool shown in Fig. 9 while tightening the nut.

15. Tighten the pinion shaft nut, rotating the pinion occasionally to insure proper bearing seating, and take frequent preload readings until the preload is at the original recorded reading established in step 3.

16. After original preload has been reached, tighten the pinion nut slowly, until an additional preload of 8 to 14 in-lbs. over the original reading is reached.

The preload should not exceed 8 to 14 in-lbs. over the original reading, or bearing failure may result. Under no circumstances should the pinion nut be backed-off to lessen preload. If this is done, a new pinion bearing spacer must be installed. In addition, the U-joint flange must never be hammered on, or power tools used.

17. Remove the oil seal replacer tool from the transmission extension housing. Install the front end of the drive shaft on the transmission output shaft.

18. Connect the rear end of the drive shaft to the axle U-joint flange, aligning the punch marks made on the driveshaft end yoke and the axle U-joint flange (Fig. 10).

19. Check the lubricant level. Make sure the axle is in running position. Add whatever amount of specified lubricant is required to reach the lower edge of the filler plug hole.

ORIGINAL U-JOINT FLANGE (IN VEHICLE REPLACEMENT)

Use procedure as outlined under Drive Pinion Oil Seal Replacement.

Synthetic seals must not be cleaned, soaked or washed in cleaning solvent.

INSTALLATION OF A NEW UNIVERSAL JOINT FLANGE (IN VEHICLE—COLLAPSIBLE SPACER)

1. Raise the vehicle and install safety stands. Remove both rear wheels and brake drums.

2. Disconnect the drive shaft from the axle U-joint flange. **Be careful to avoid dropping the loose universal joint bearing cups. Hold the cups on the spider with tape.** Mark the cups so that they will be in their original position in relation to the flange when they are assembled. Remove the drive shaft from the transmission extension housing. Install an oil seal replacer tool in the transmission extension housing to prevent transmission fluid leakage. Refer to the transmission group for the appropriate tool.

3. Install an in-lb torque wrench on the pinion nut. Record the torque required to maintain rotation of the pinion shaft through several revolutions.

4. While holding the flange with the tool shown in Fig. 21 or Fig. 22, remove the integral pinion nut and washer.

5. Clean the pinion bearing retainer around the oil seal. Place a drain pan under the seal, or raise the front of the vehicle higher than the rear. Synthetic seals must not be cleaned, soaked or washed in cleaning solvent.

6. Using the tool shown in Fig. 21 or Fig. 22, remove the U-joint flange.

7. Check splines on the pinion shaft to be sure they are free of burrs. If burrs are evident, remove them by using a fine crocus cloth, working in a rotational motion, then wipe clean.

Apply a small amount of lubricant to U-joint splines.

8. Install the U-joint flange using the tool shown in Fig. 44.

9. Install a new integral nut and washer on the pinion shaft. (Apply a small amount of lubricant on the washer side of the nut.)

10. Hold the flange with the tool shown in Fig. 21 or Fig. 22 while the nut is being tightened.

11. Tighten the pinion shaft nut, rotating the pinion occasionally to insure proper bearing seating, and take frequent preload readings until the preload is at the original recorded reading established in step 3.

12. After the original preload has been reached, tighten the pinion nut slowly, until an additional preload of 8 to 14 in-lb over the original reading is reached. (The preload should not exceed 8 to 14 in-lb over the original reading, or bearing failure may result.)

Under no circumstances should the pinion nut be backed off to lessen preload. If this is done, a new pinion bearing spacer must be installed. In addition, the U-joint flange must never be hammered on, or power tools used.

13. Remove the oil seal replacer tool from the transmission extension

housing. Install the front end of the drive shaft on the transmission output shaft.

14. Connect the rear end of the drive shaft to the axle U-joint flange, aligning the scribe marks made on the drive shaft end yoke and the axle U-joint flange (Fig. 10).

15. Check the lubricant level. **Make sure the axle is in running position.** Add whatever amount of specified lubricant is required to reach the lower edge of the filler plug hole.

3 REMOVAL AND INSTALLATION

DIFFERENTIAL CARRIER ASSEMBLY

REMOVAL

1. Raise the vehicle on a hoist and remove the two rear wheels and tires.

2. Remove the two brake drums (3 Tinnerman nuts at each drum) from the axle shaft flange studs. If difficulty is experienced in removing the drums, back off the brake shoes as explained in Part 2-2.

3. Working through the hole provided in each axle shaft flange, remove the nuts that secure the rear wheel bearing retainer plate. Pull each axle shaft assembly out of the axle housing (Fig. 3). **Care must be exercised to prevent damage to the production-type synthetic oil seal, if so equipped. Any roughing or cutting of the seal element during removal or installation can result in early seal failure.**

Install a nut on one of the brake backing plate retaining bolts to hold the plate to the axle housing after the shaft has been removed. **Whenever a rear axle shaft is replaced, the wheel bearing oil seal must be replaced.** Remove both seals with the tools shown in Fig. 5.

4. Make scribe marks on the drive shaft end yoke and the axle U-joint flange to insure proper position at assembly. Disconnect the drive shaft from the rear axle U-joint flange. **Be careful to avoid dropping the loose universal joint bearing cups.** Hold the cups on the spider with tape, mark the cups so that they will be in their original position in relation to the flange when they are assembled. Remove the drive shaft from the transmission extension housing. Install an oil seal replacer tool in the housing to prevent transmission leakage. Refer to the transmission group for the appropriate tool.

5. Place a drain pan under the carrier and housing, remove the carrier attaching nuts, and drain the axle. Remove the carrier assembly from the axle housing.

INSTALLATION

Synthetic production type wheel bearing seals must not be cleaned, soaked or washed in cleaning solvent.

1. Clean the axle housing and shafts using kerosene and swabs. To avoid contamination of the grease in the sealed ball bearings, do not allow any quantity of solvent directly on the wheel bearings. Clean the mating surfaces of the axle housing and carrier.

2. Position the differential carrier on the studs in the axle housing using a new gasket between the carrier and housing. Install the carrier-to-housing retaining nuts, and torque them to specifications.

3. Remove the oil seal replacer tool from the transmission extension housing. Slide the drive shaft front U-joint slip yoke splines on to the transmission output shaft.

4. Connect the drive shaft to the axle U-joint flange, aligning the scribe marks made on the drive shaft end yoke and the axle U-joint flange during the removal procedure (Fig. 10). Then install the U-bolts, and nuts and torque them to specifications.

5. If the synthetic production type wheel bearing seals were replaced with service leather type seals, soak two new rear wheel bearing oil seals in SAE 10 oil for 1/2 hour before the installation. Wipe a small amount of an oil resistant sealer on the outer edge of each seal before it is installed. **Do not put any of the sealer on the sealing lip.** Install the oil seals in the ends of the rear axle housing with the tools shown in Fig. 5.

6. Install the two axle shaft assemblies in the axle housing. Use care to prevent damage to the oil seals.

Place a new gasket on the brake backing plate and carefully slide the axle shaft into the housing so that the rough forging of the shaft will not damage the oil seal. Start the axle splines into the differential side gear, and push the shaft in until the bearing bottoms in the housing.

7. Install the bearing retainers on the attaching bolts on the axle housing flanges. Install the nuts on the bolts and torque to specifications.

8. If the rear brake shoes were backed off, adjust the brakes as outlined in Part 2-1.

9. Install the two rear brake drums and the drum retaining nuts.

10. Install the rear wheels and tires.

11. Fill the rear axle to the correct level with the specified lubricant.

AXLE HOUSING

REMOVAL

1. Remove the carrier assembly from the axle housing as outlined in the foregoing procedure.

2. Position safety stands under the rear frame members.

3. Disengage the brake line from the clips that retain the line to the axle housing.

4. Disconnect the vent tube from the rear axle housing.

5. Remove the brake backing plate assemblies from the axle housing, and support them with wire. **Do not disconnect the brake line.**

6. Disconnect each rear shock absorber from the bracket on the axle housing and position out of the way.

7. Lower the rear axle slightly to reduce some of the spring tension. At each rear spring, remove the spring clip (U-bolt) nuts, spring clips, and spring clip plate. Remove the spring insulators and wedges. See Part 3-2.

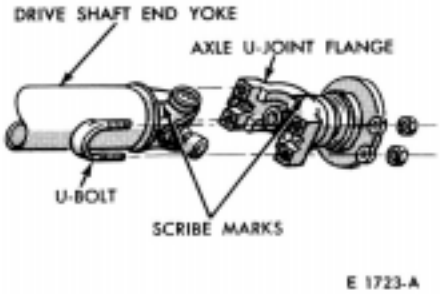

FIG. 10—Drive Shaft-To-Axle U-Joint Connection

8. Remove the rear axle housing from under the vehicle.

INSTALLATION

1. Position the rear axle housing under the rear springs. Position the spring insulators and wedges between the axle housing and springs.

2. Install the spring clips (U-bolts), spring clip plate, and nuts. **Torque the spring clip nuts evenly to specifications.**

3. If a new axle housing is being installed, remove the bolts that retain the carrier plate and bearing retainer from the old housing flanges. Position the bolts in the new housing flanges to hold the brake backing plates in position. Install the backing plates with new gaskets to the axle housing flanges.

4. Connect the vent tube to the axle housing.

5. Position the brake line to the axle housing, and secure with the retaining clips.

6. Raise the rear axle housing and springs enough to allow connecting the rear shock absorbers to the brackets on the housing. Connect the lower end of each shock absorber to the bracket stud, and install the washer and nut. Torque the nut to specifications.

7. Install the carrier assembly and the two axle shaft assemblies in the axle housing as outlined in the Installation procedure under Differential Carrier Removable Carrier Type Axle, in this section.

4 MAJOR REPAIR OPERATIONS—REMOVABLE CARRIER TYPE AXLE

DISASSEMBLY

After mounting the carrier in a holding fixture, perform the Inspection Before Disassembly of Carrier as explained in Part 4-1, Section 3. Then disassemble the carrier as outlined in the following procedures.

REMOVAL AND DISASSEMBLY OF CONVENTIONAL DIFFERENTIAL CASE

1. Mark one differential bearing cap and the mating bearing support with punch marks to help position the parts properly during assembly of the carrier. Also, mark one of the bearing adjusting nuts and the carrier with scribe marks for proper location during assembly (Fig. 11).

2. Remove the adjusting nut locks, bearing cups, and adjusting nuts. Then lift the differential assembly out of the carrier.

3. If the differential bearings are to be removed, use the tool shown in Fig. 16.

4. Mark the differential case, cover, and ring gear for assembly in the original position.

5. Remove the bolts that attach the ring gear to the differential case. Press the gear from the case or tap it off with a soft-faced hammer.

6. With a drift, drive the differential pinion shaft lock pin (Fig. 12), and separate the 2-piece differential case.

7. Drive out the pinion shaft with a brass drift (Fig. 13).

8. Remove the gears and thrust washers (Fig. 14).

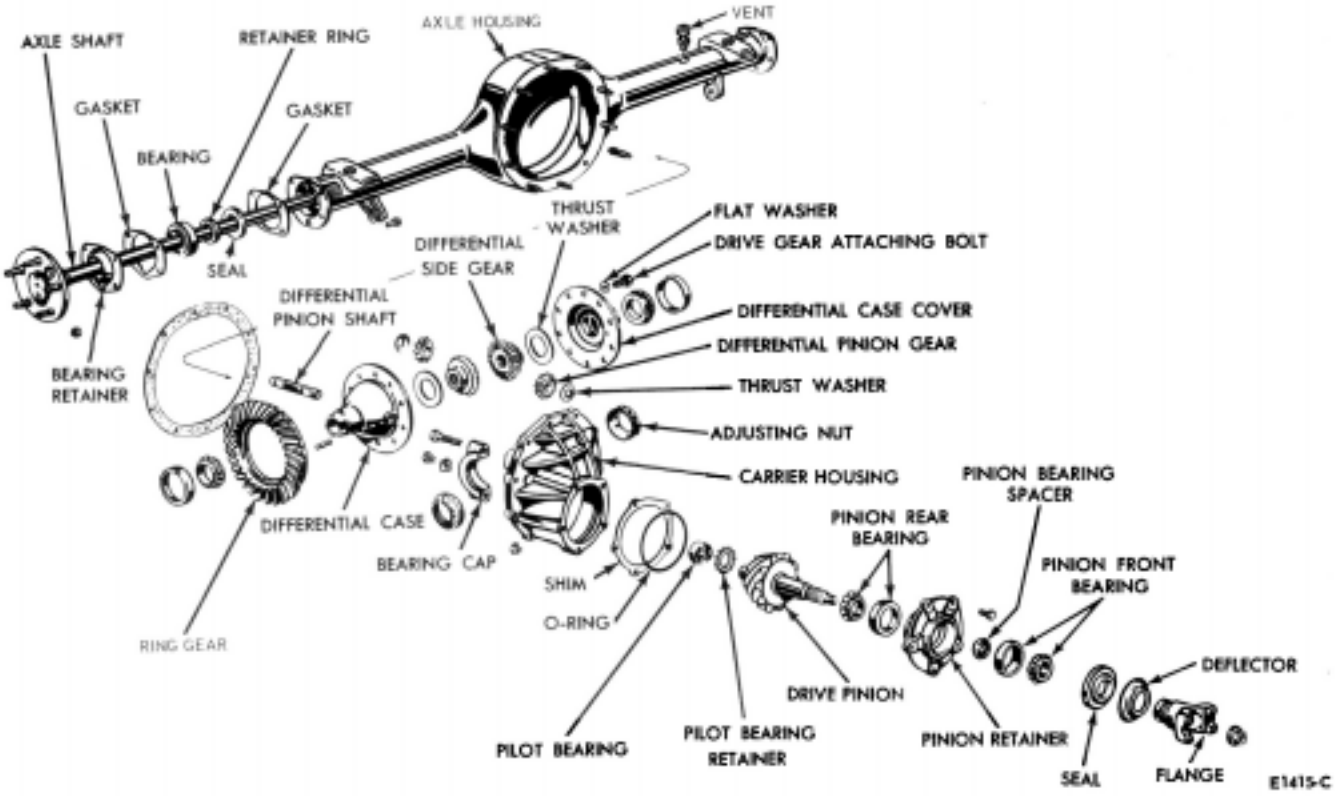

FIG. 11—Rear Axle Disassembled

REMOVAL AND DISASSEMBLY OF LIMITED-SLIP DIFFERENTIAL CASE

1. Remove the differential case from the carrier and remove the bearings from the differential as outlined in steps 1 through 4 in the foregoing procedure.

2. Place the differential case in a hydraulic press, and apply about one ton pressure across the case bearing hubs while removing the ring gear attaching bolts. This procedure will contain the spring pressure between the differential case and cover until after the bolts are removed, and thereby prevent stripping of the threads.

3. Release the hydraulic press ram, and remove the differential case cover.

4. Remove the Belleville spring (Fig. 15).

5. Remove the steel and the bonded clutch plates.

6. Remove the differential clutch hub, side gear, and thrust washer.

7. Remove the ring gear from the differential case.

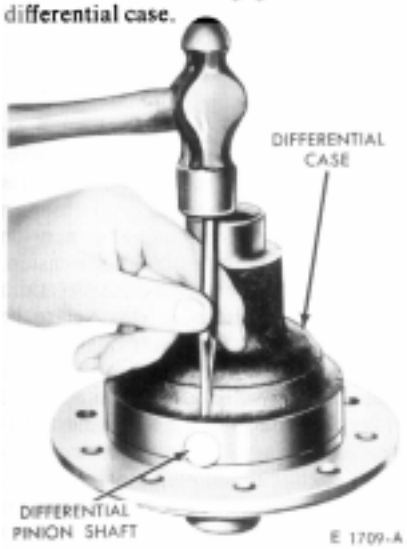

FIG. 12—Removing Differential Pinion Shaft Lock Pin

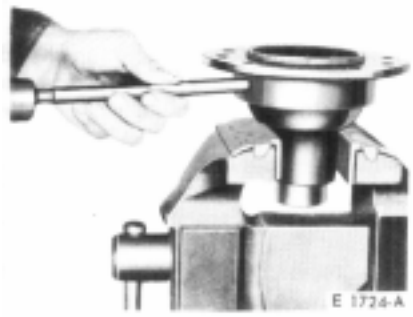

FIG. 13—Driving Out Differential Pinion Shaft

8. Drive out the differential pinion shaft lock pin.

9. With a brass drift, drive out the differential pinion shaft. Then remove the pinion gears, the other side gear, and thrust washers.

REMOVAL AND DISASSEMBLY OF DRIVE PINION AND BEARING RETAINER

1. Turn the carrier case upright, and remove the pinion shaft nut (Fig. 16). Then remove the U-joint flange (Fig. 8).

2. Remove the seal (Fig. 17) and the slinger.

3. Remove the pinion, bearing, and retainer assembly from the carrier housing (Fig. 28). Measure the shim thickness with a micrometer. Record this original shim thickness. If a new gear set is installed during assembly, a new shim will have to be installed. The original shim thickness is one of the factors necessary in calculating the new shim thickness. **Extreme care**

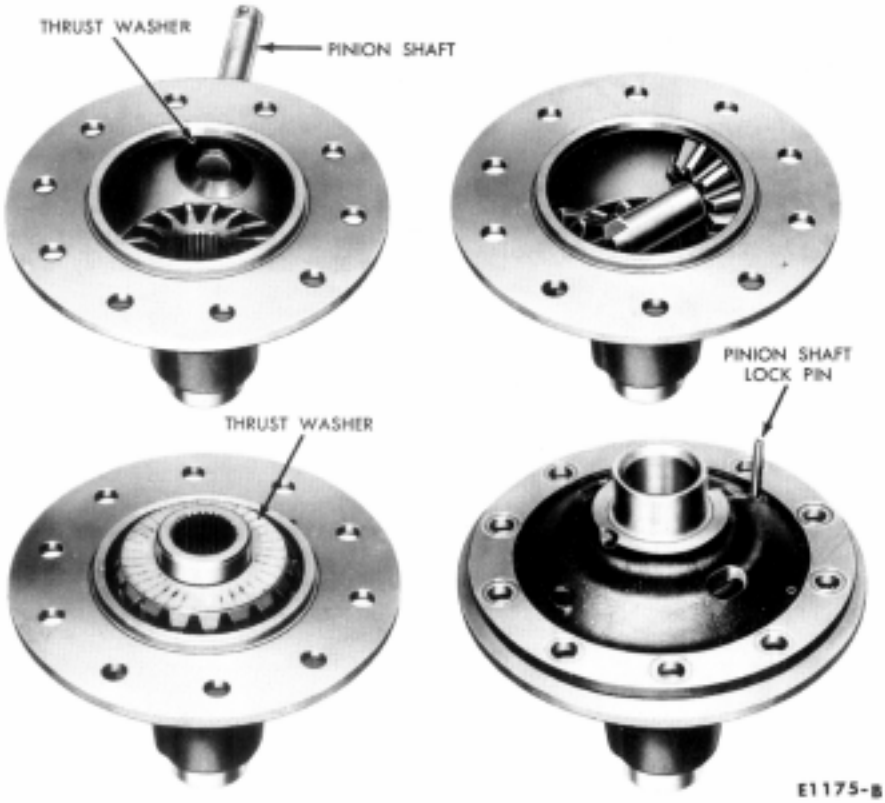

FIG. 14 Assembly of Differential Case

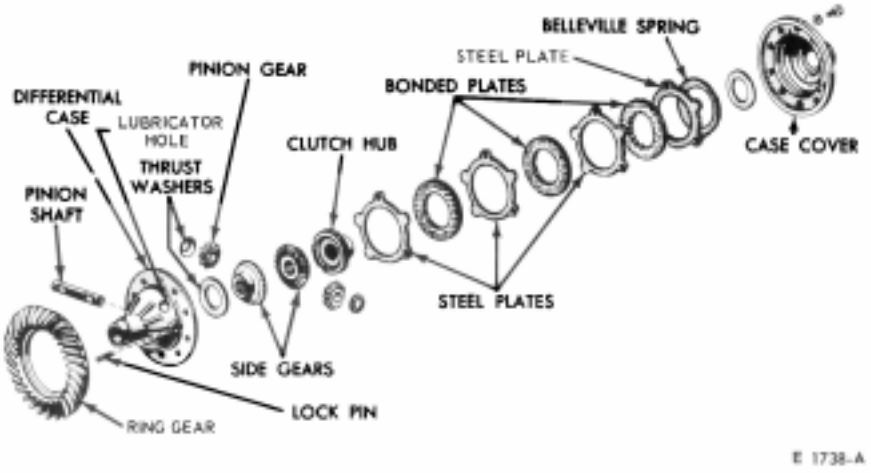

FIG. 15—Limited-Slip Differential Assembly

FIG. 16—Removing Pinion Shaft Lock Nut

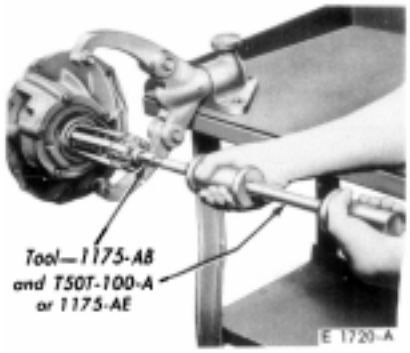

FIG. 17—Removing Pinion Seal

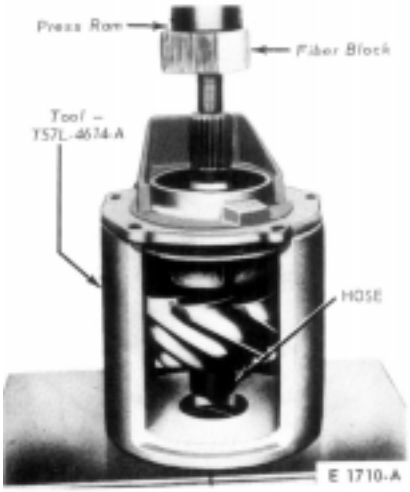

FIG. 18—Removing Pinion Front Bearing Cone

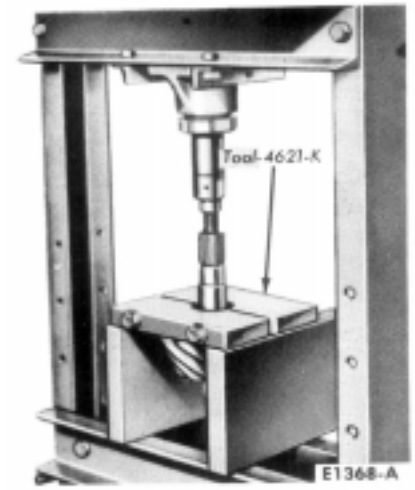

FIG. 19—Removing Pinion Rear Bearing Cone

must be taken not to damage the mounting surfaces of the retainer and carrier.

4. Place a protective sleeve (hose) on the pinion pilot bearing surface. Press the pinion shaft out of the pinion front bearing cone (Fig. 18).

5. Press the pinion shaft out of the pinion rear bearing cone (Fig. 19).

PARTS REPAIR OR REPLACEMENT

Clean and inspect all the parts as outlined in Part 4-1, Section 3. Before assembling the carrier, repair or replace all parts as indicated by the inspection.

The principal replacement operations are covered in the following procedures. All other repair or replacement operations are performed during Cleaning and Inspection Part 4-1, Section 3, or during the Assembly in this section.

PILOT BEARING

1. Remove the pilot bearing as shown in Fig. 20. Drive out the pilot bearing and the bearing retainer together.

2. Drive the new bearing in until it bottoms as shown in Fig. 21.

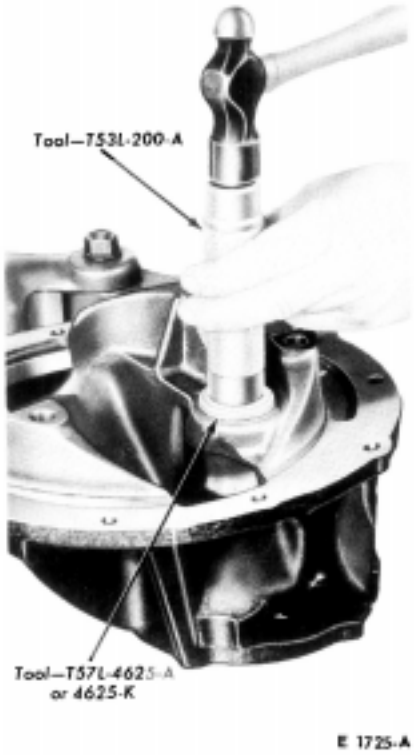

FIG. 20—Removing Pilot Bearing

3. Using the same tools, install a new pilot bearing retainer with the concave side up.

PINION BEARING CUPS

Do not remove the pinion bearing cups from the retainer unless the cups are worn or damaged. The flange and pilot of the retainer are machined during manufacture by locating on these cups after they are installed in their bores. If the cups are worn or damaged, they should be replaced. Remove the cups as shown in Figs. 22 and 23.

Install the cups as shown in Figs. 24 and 25.

After the new cups are installed, make sure they are seated in the retainer by trying to insert a 0.0015-inch feeler gauge between the cup and the bottom of the bore. Whenever the cups are replaced, the cone and roller assemblies should also be replaced.

DRIVE PINION AND RING GEAR SET

When replacing a ring gear and pinion, note that the original factory installed shim is of the correct thickness to adjust for individual variations in both the carrier housing dimension and in the original gear set dimension. Therefore, to select the correct shim thickness for the new gear set to be installed, follow these steps:

1. With a micrometer, measure the thickness of the original shim removed from the axle and use the same thickness upon installation of the replacement carrier assembly or drive pinion. If further shim change is necessary, it will be indicated in the tooth pattern check.

2. If the original shim is lost, substitute a nominal shim for the original and use the tooth pattern check to determine if further shim changes are required. Nominal shim thickness is indicated in Part 4-6, Specifications.

A new ring gear and pinion should always be installed in an axle as a matched set (never separately). **Be sure the same identifying (matching) number, painted in white, appears on the bolt hole face of the ring gear and on the head of the drive pinion (Fig. 26).**

3. After determining the correct shim thickness as explained in the foregoing steps, install the new pinion and ring gear as outlined under Assembly.

FIG. 21—Installing Pilot Bearing

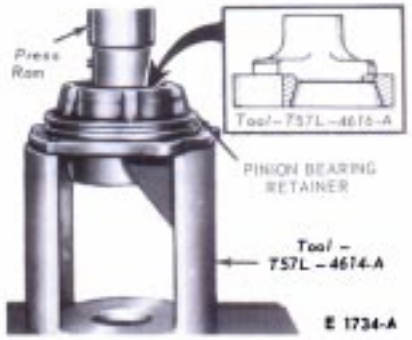

FIG. 22—Removing Pinion Front Bearing

DIFFERENTIAL CASE BEARINGS AND RING GEAR

If the ring gear runout check (before disassembly) exceeded specifications, the condition may be caused by a warped gear, a defective case, or excessively worn differential bearings.

To determine the cause of excessive runout proceed as follows:

1. Assemble the two halves of the differential case together without the ring gear, and press the two differential side bearings on the case hubs.

2. Place the cups on the bearings and set the differential case in the carrier.

3. Install the bearing caps. Install the adjusting nuts and turn them inward until they just contact the bearing cups. Tighten the bearing cap to 5 ft-lbs torque.

4. Tighten the right nut two notches beyond the position where it first contacts the bearing cup. Rotate the differential case several revolutions in each direction while the bearings are loaded to seat the bearings in their cups. **This step is important.**

FIG. 23—Removing Pinion Rear Bearing Cup

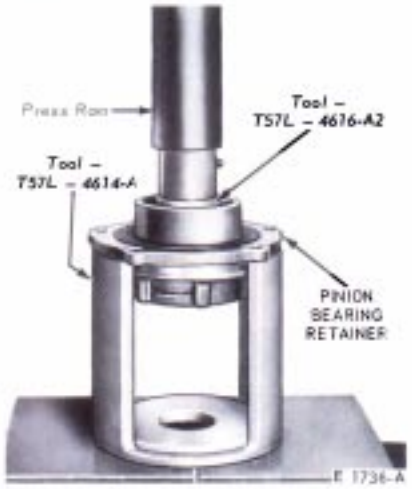

FIG. 24—Installing Pinion Front Bearing Cup

5. Again loosen the right nut to release the preload. Check to see that the left nut contacts the bearing cup. Using the dial indicator set-up shown in Fig. 5, Part 4-1, adjust the preload to 0.008 to 0.012 case spread for new bearings or 0.005 to 0.008 for the original bearings, if re-used.

6. Check the runout of the differential case flange with a dial indicator. If the runout is within specifications, install a new drive gear. If the runout exceeds specifications the ring gear is true and the trouble is due to either a defective case or worn bearings.

7. Remove the differential case from the carrier and remove the side bearings from the case.

8. Install **new** bearings on the case hubs, and again install the differential assembly in the carrier **without** the ring gear.

9. Check the case runout again with the new bearings. If the runout is now

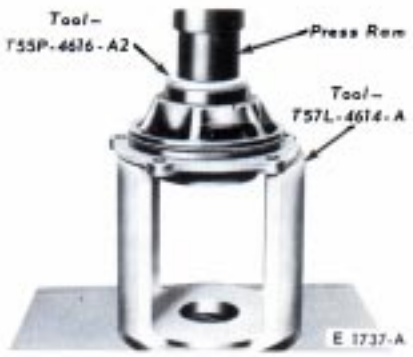

FIG. 25—Installing Pinion Rear Bearing

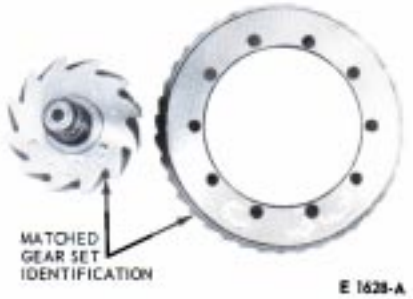

FIG. 26—Pinion and Ring Gear Markings

within limits, the old bearings were excessively worn. Use the new bearings for assembly. **If the runout is still excessive, the case is defective and should be replaced.**

ASSEMBLY

ASSEMBLY AND INSTALLATION OF DRIVE PINION AND BEARING RETAINER

1. Install the drive pinion rear bearing cone and roller on the pinion shaft (Fig. 28). Place a new spacer on the pinion shaft (Fig. 29).

2. Place the bearing retainer on the pinion shaft, and install the front bearing cone and roller in the retainer. Press the front bearing cone and roller into position as shown in Fig. 30.

3. Lubricate the O-ring with axle lubricant and install it in its groove in the pinion retainer. **Be careful not to twist it. Snap the O-ring into position.**

4. Place the proper shim on the carrier housing and install the pinion and retainer assembly being careful not to pinch the O-ring (Fig. 32).

5. Install the pinion attaching bolts. Torque the bolts to specifications.

6. Coat the outside edge of a new oil seal with a small amount of an oil

resistant sealer. **Do not put any of the sealer on the sealing lip.** Install the seal in the bearing retainer (Fig. 9).

7. Install the U-joint flange (Fig. 27).

8. Start a new integral nut washer on the pinion shaft.

9. Hold the flange (Fig. 16) and tighten the pinion shaft nut to 175 ft-lbs. **Do not exceed 175 ft-lbs at this time.** As the pinion shaft nut is tightened, rotate the pinion shaft frequently to allow the bearing nut to seat.

10. Check the pinion bearing preload as shown in Fig. 34. If an in-lb torque wrench is not available, tool 4209-C may be used in combination with tool 4209-C12. Correct preload will be obtained when the torque required to rotate the pinion in the retainer is as specified in Part 4-5. If the torque required to rotate the pinion is less than specified, tighten the pinion shaft nut a little at a time until the proper preload is established. **Do not overtighten the nut.** If an excessive preload is obtained as a result of overtightening, replace the collapsible bearing spacer.

Do not back off the pinion shaft nut to establish pinion bearing preload. If the torque on the pinion shaft nut is less than 175 ft-lbs after bearing preload is established, a new collapsible spacer must be used.

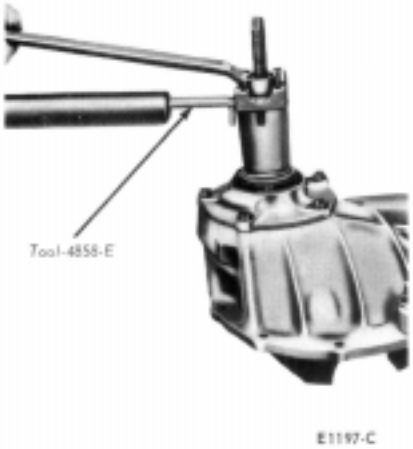

FIG. 27—Installing U-Joint Flange

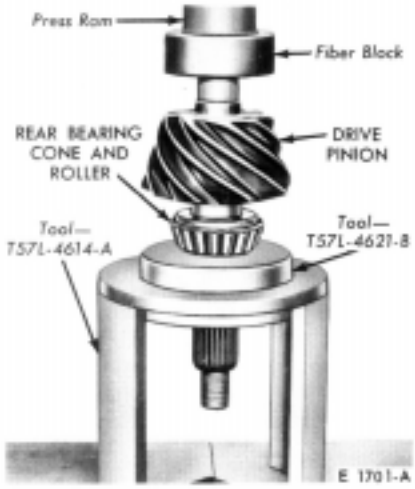

FIG. 28—Installing Pinion Rear Bearing Cone

ASSEMBLY AND INSTALLATION OF CONVENTIONAL DIFFERENTIAL CASE

1. Place a side gear and thrust washer in the differential case bore (Fig. 14). **Lubricate all differential parts liberally with axle lubricant during assembly.**

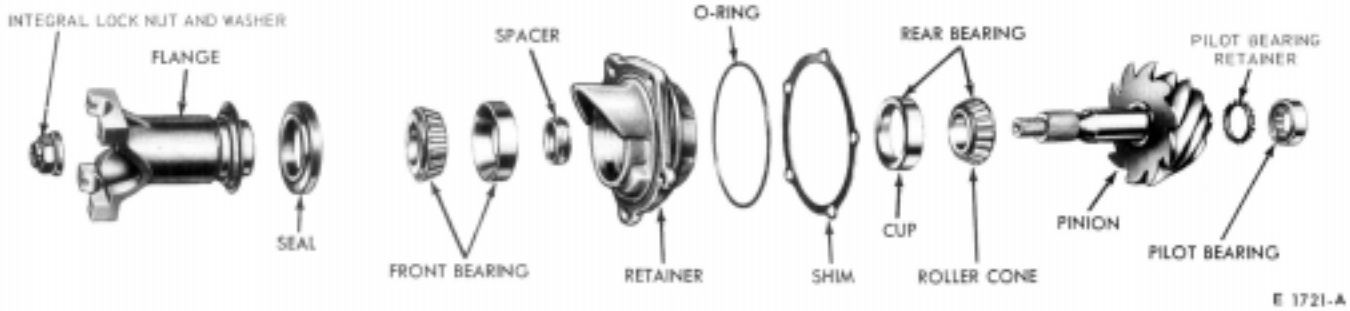

FIG. 29—Pinion and Bearing Retainer

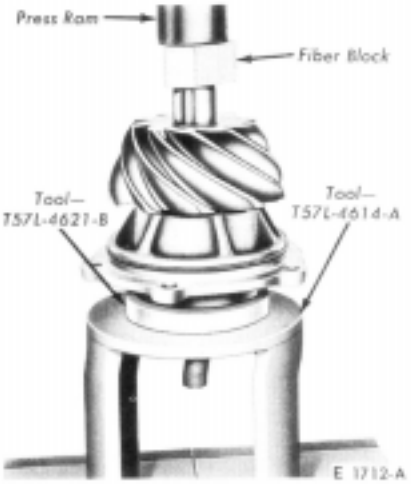

FIG. 30—Installing Pinion Front Bearing

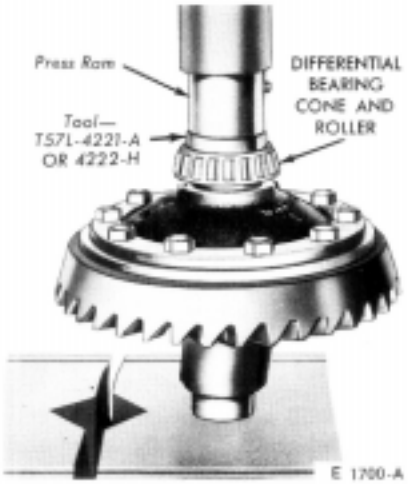

FIG. 31—Installing Differential Bearings

FIG. 32—Installing Pinion and Retainer

2. With a soft-faced hammer, drive the pinion shaft into the case only far enough to retain a pinion thrust washer and pinion gear.

3. Place the second pinion and thrust washer in position, and drive the pinion shaft into place. **Carefully line up the pinion shaft lock pin holes.**

4. Place the other side gear and thrust washer in position (Fig. 14), and install the cover on the differential case. Install the pinion shaft lock pin. A pinion or axle shaft spline can be inserted in the side gear spline to check for free rotation of the differential gears.

5. Insert two 7/16 (NF) bolts two inches long through the differential case flange, and thread them three or four turns into the ring gear as a guide in aligning the ring gear bolt holes. Press or tap the ring gear into position.

6. Install and tighten the ring gear bolts and washers evenly, and torque them alternately across the gear to specification.

7. If the differential bearings have been removed, press them on as shown in Fig. 31.

8. Wipe a thin coating of lubricant on the bearing bores so that the differential bearing cups will move easily.

9. Place the cups on the bearings. If the gear set is of the **non-hunting** or **partial non-hunting** type, assemble the differential case and ring gear assembly in the carrier so that the marked tooth on the pinion indexes between the marked teeth on the ring gear as shown in Fig. 33.

In almost every case of improper assembly (gears assembled out of time), the noise level and probability of failure will be higher than they would be with properly assembled gears.

When installing the **hunting type** gear set (no timing marks), assemble the differential case and ring gear assembly in the carrier without regard to the matching of any particular gear teeth.

10. Slide the assembly along the bores until a slight amount of backlash is felt between the gear teeth.

11. Set the adjusting nuts in the bores so that they just contact the bearing cups. The nuts should be engaged about the same number of threads on each side.

12. Carefully position the bearing caps on the carrier. Match the marks made when the caps were removed.

13. Install the bearing cap bolts and alternately torque them to specifications.

14. If the adjusting nuts do not turn freely as the cap bolts are tightened, remove the bearing caps and again inspect for damaged threads or incorrectly positioned caps. Tightening the bolts to the specified torque is done to be sure that the cups and adjusting nuts are seated. Loosen the cap bolts, and torque them to only 25 ft-lb before making adjustments.

15. Adjust the backlash between the ring gear and pinion as outlined in Part 4-1, Section 2.

16. Be sure to make a final tooth pattern check before installing the carrier assembly in the axle housing.

ASSEMBLY AND INSTALLATION OF LIMITED-SLIP DIFFERENTIAL CASE

1. Place the inner side gear and thrust washer in the differential case (Fig. 15). Lubricate all parts liberally with limited-slip axle lubricant during assembly.

2. With a soft-faced hammer, drive the pinion shaft into the case only far enough to retain a pinion thrust washer and pinion gear.

3. Place the second pinion and thrust washer in position, and drive the pinion shaft into place. Carefully line up the pinion shaft lock pin holes.

4. Install the pinion shaft lock pin. The lock pin must not extend beyond the surface of the case.

5. Insert two 2-inch 7/16 (NF) bolts through the differential case flange, and thread them three or four turns into the ring gear as a guide in aligning the ring gear bolt holes. Press or tap the ring gear into position.

FIG. 33—Gear Set Timing Marks

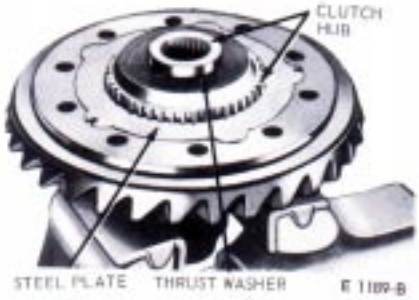

FIG. 34—Installing Steel Clutch Plates and Friction Plates

FIG. 35—Belleville Spring Installation

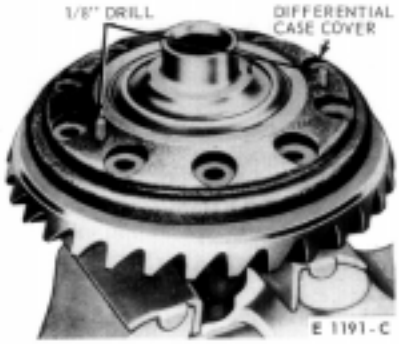

FIG. 36—Installing Differential Cover

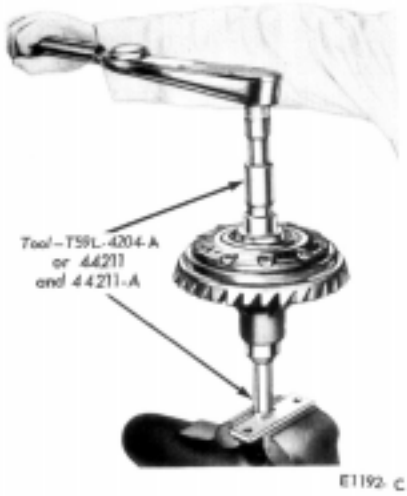

FIG. 37—Checking Differential Torque

6. Clamp the differential case in a soft-jawed vise. Install the differential outer side gear on the differential pinion gears. Place the clutch hub on the side gear. Place the thrust washer on the hub.

LIMITED-SLIP CLUTCH PLATE INSTALLATION

Prior to clutch plate installation, the friction bonded plates must be soaked in C6AZ-19580-C (ESW-M2C-104-A) differential lubricant for approximately 1/2 hour. In addition, the differential lubricant must be liberally applied to all components to be assembled.

1. Place the clutch hub into position in a soft-jawed vise.

2. First, install a steel clutch plate in the cavity of the differential case opposite the ring gear and then a bonded friction plate (Fig. 34). Any tab on the steel plates can be inserted into any cavity in the differential case, however when the first steel plate is inserted the others must be placed in the same manner (Fig. 35), **so the tabs with slots line up.** Install the remaining plates: a steel plate, bonded friction plate, a steel plate, bonded friction plate and lastly a steel plate.

Make sure the bonded friction plate inner-spline teeth properly engage the hub spline.

3. Center the Belleville spring on the clutch pack (spring concave-side facing downward on the pack) to prevent trapping the spring between the left and right hand case in an eccentric position (Fig. 35). **Improper location of the Belleville spring will cause extremely high torque and differential chatter. Be sure the slots in the rabbit ears of the steel plates are in proper alignment.**

4. Carefully set the differential case cover over the right hand case (Fig. 36). **At this point, no force or pressure should be applied to the cover. The cover contains two 3/16 inch holes by which the clutch plates can be properly aligned.** Insert the shank ends of two 1/8 inch drill bits into the holes, and work the drill bits back-and forth until the plates are centered (Fig. 36). When the clutch plates are centered, the weight of the cover will cause it to fall into position. Remove the drill bits.

5. Install the ring gear to differential case bolts, and tighten them evenly and alternately across the diameter of the ring gear. Tighten the bolts to specification.

6. Prior to installation of the limited-slip differential into the vehicle, a differential torque check must be made. Check the torque required to rotate one side gear while the other side gear is held (Fig. 37). The initial breakaway torque required to start the side gear turning may exceed 300 ft-lbs. Observe only the torque required for continuous even rotation. There should be no abnormal roughness or binding. In some instances the rotating torque may reach 250 ft-lbs, this condition is acceptable, if rotation is smooth. If the results of the bench check are not within specified limits, internal trouble may be present and should be corrected before installing the assembly in the vehicle. Some possible torque problems are as follows:

High Torque

a. Insufficent lubricant on the clutch plates.

b. A clutch plate wedged in between the case halves.

c. An improperly centered Belleville spring.

Low Torque

a. Weak Belleville spring.

b. Improper amount of clutch plates installed.

Under no circumstances should the Belleville spring be ground down to reduce torque. The torque required to keep the side gear turning with new clutch plates is 155 to 195 ft-lbs. On reused clutch plates, the torque required is 75 ft-lbs. minimum.

7. If the differential bearings have been removed, press them on as shown in Fig. 31.

8. Install the side bearings on the differential case, and install the case in the carrier as described in steps 7 through 16 under Assembly and Installation of Conventional Differential Case. Adjust and check backlash between the ring gear and pinion as directed under Differential Bearing Preload Adjustments.