PART 6-2— *Model 3.03 Three-Speed Transmission*

Section	Page
1 Description and Operation	6-10
Description	6-10
Operation	6-11
2 In-Vehicle Adjustment and Repairs	6-11
Shift Linkage Adjustment	6-11
Gear Shift Tube Replacement	6-13
3 Removal and Installation	6-14
Removal	6-14
Installation	6-14
4 Major Repair Operations	6-15
Disassembly	6-15
Parts Repair or Replacement	6-16
Shift Levers and Seals	6-16
Input Shaft Bearing	6-16
Synchronizers	6-16
Countershaft Gear Bearings	6-17
Assembly	6-17

1 DESCRIPTION AND OPERATION

DESCRIPTION

The HFF Model three speed transmission (Fig. 1) designation 3.03 is the actual distance between the center line of the countershaft and the center line of the input shaft.

A transmission service identification tag is located on the right side of the case at the front. The first line on the tag will show the transmission model and service identification code when required. The second line will show the transmission serial number.

This transmission is of the fully synchronized type, with all gears except the reverse sliding gear and sleeve being in constant mesh. All forward-speed changes are accomplished with synchronizer sleeves (Fig. 2). The synchronizers enable quicker shifts, greatly reduce gear clash and permit down shifting, high to intermediate between 40-20 mph and from intermediate to low below 20 mph.

The forward-speed gears are helical-cut and are in constant mesh (Fig. 2). Gears used in the reverse gear train are spur-cut and are not synchronized.

Ball bearings support the input shaft and gear and the center of the output shaft (Fig. 16 and 18). Roller bearings in the input shaft bore support the front of the output shaft. The countershaft gear (cluster gear) runs on two rows of roller bearings. Two bronze bushings are used in the reverse idler gear.

Synchronizers and blocking rings are the conventional tapered ring and straight clutch gear type (Figs. 20 and 21).

The shift forks, shift rails, deten

Fig. 1 — Three-Speed Transmission

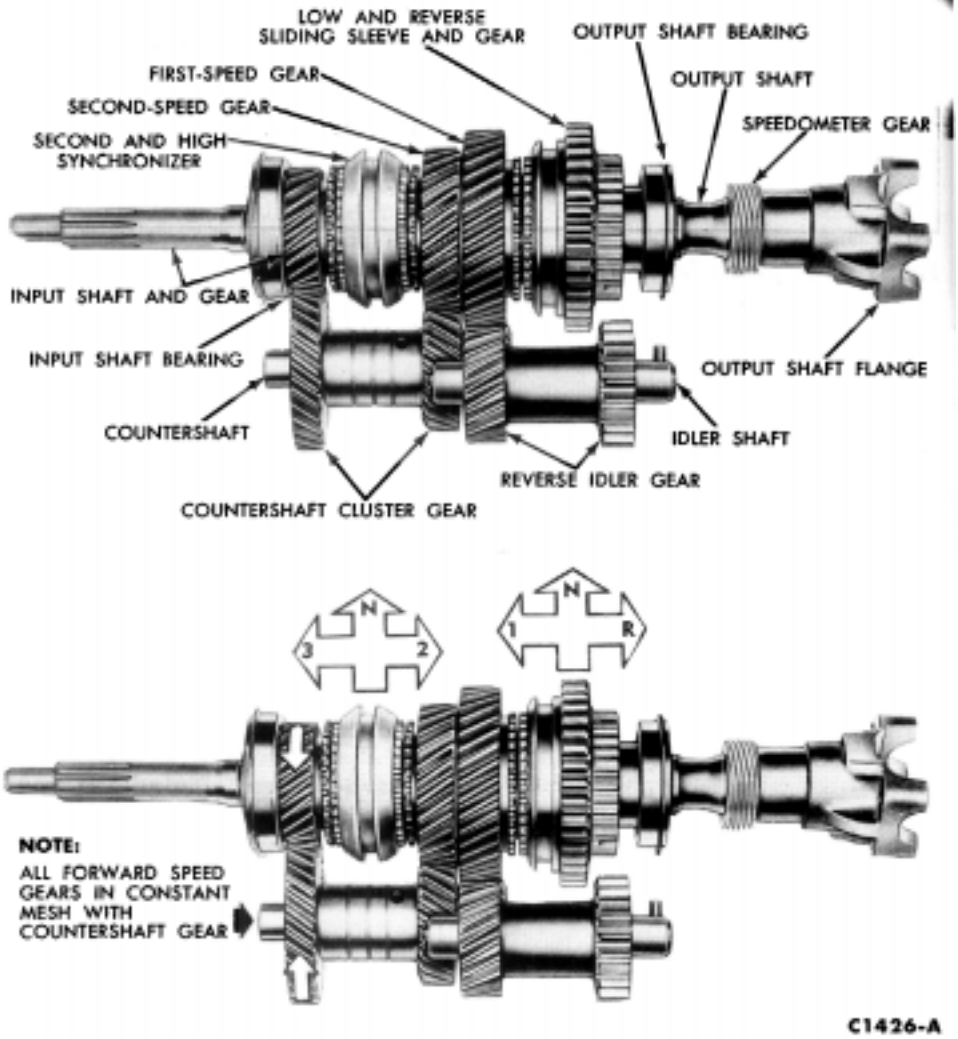

Fig. 2 — Power Flow — Three-Speed Transmission

mechanism, and related parts are provided in the transmission case (Fig. 12).

OPERATION

When the first-speed gear is selected, the shift lever moves the reverse sliding gear and sleeve forward and forces the synchronizer blocking ring conical surface against the matching cone on the constant mesh first gear located on the output shaft. If the car is moving, the internal teeth of the reverse gear and sleeve and blocking ring will not index until the constant mesh first gear is brought up or down to the speed of the reverse gear and sleeve which is rotating at output shaft speed.

The reverse sliding gear and sleeve has internal splines that, with further movement, will slide over the blocking ring and engage external clutch teeth on the constant mesh first gear. Since first gear is now locked to the output shaft and is always meshed with the countershaft (cluster) gear, the power flow is from the input gear, through the countershaft gear, to the constant mesh first gear, through the reverse gear and sleeve to the output shaft, and out the rear of the transmission.

Engagement of second and third gears is the same as first except for ratio. In third gear, the input gear and shaft is locked directly to the output shaft by the second and third speed synchronizer to provide a ratio of 1:1.

Spur teeth are cut on the outside of the reverse gear and sleeve. The reverse sliding gear and sleeve like the hub are always locked to the output shaft. Reverse gear is engaged by sliding the reverse gear and sleeve into mesh with the spur gear at the rear of the idler gear. The drive is then from the input gear, through the countershaft gear, to and through the reverse idler gear to the output shaft reverse gear and sleeve. The gears in this position will rotate the output shaft in a reverse direction.

A system of interlocks and detents in the transmission case prevents the selection of more than one gear at a time and helps to hold any gear in the selected position.

2 IN-VEHICLE ADJUSTMENT AND REPAIRS

SHIFT LINKAGE ADJUSTMENT

ECONOLINE

Move the selector lever through all shift positions to see if cross-over operation is smooth. If cross-over operation is not smooth, adjust the gear shift levers.

1. Place the gear shift lever in the neutral position.
2. Loosen the trunnion nuts at the transmission shift levers (Fig. 3). Loosen the nuts sufficiently to allow the shift rods to slide freely in their trunnions.
3. Insert a 1/4 inch rod through the pilot hole in the shift tube floor-mounted bracket until it enters the adjustment hole of both the upper and lower shift lever.
4. Place the transmission shift levers in the neutral position and tighten the trunnion nuts.
5. Remove the 1/4 inch rod from the pilot hole, and check the operation of the selector lever in all shift positions.

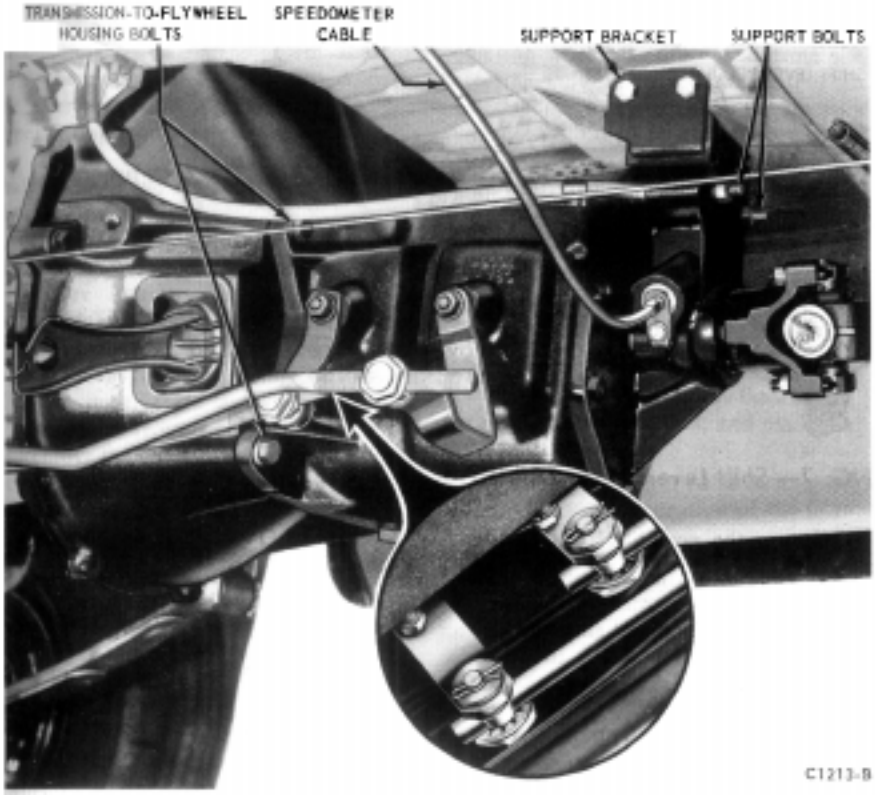

FIG. 3 –Transmission Installation—Econoline

SHIFT LINKAGE ADJUSTMENT

BRONCO

1. Place the gear shift lever in the neutral position.
2. Insert a 3/16 inch diameter alignment pin through the steering column bracket and shift levers (Fig. 4). It

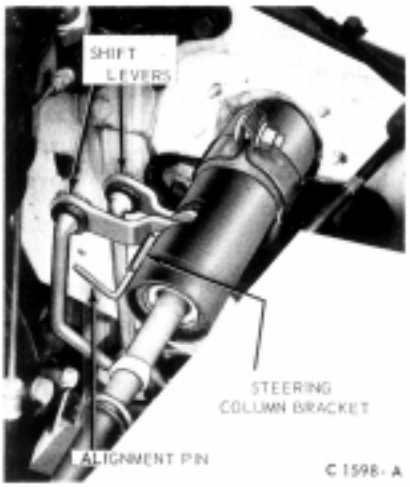

FIG. 4—Gear Shift Linkage Adjustment—Bronco

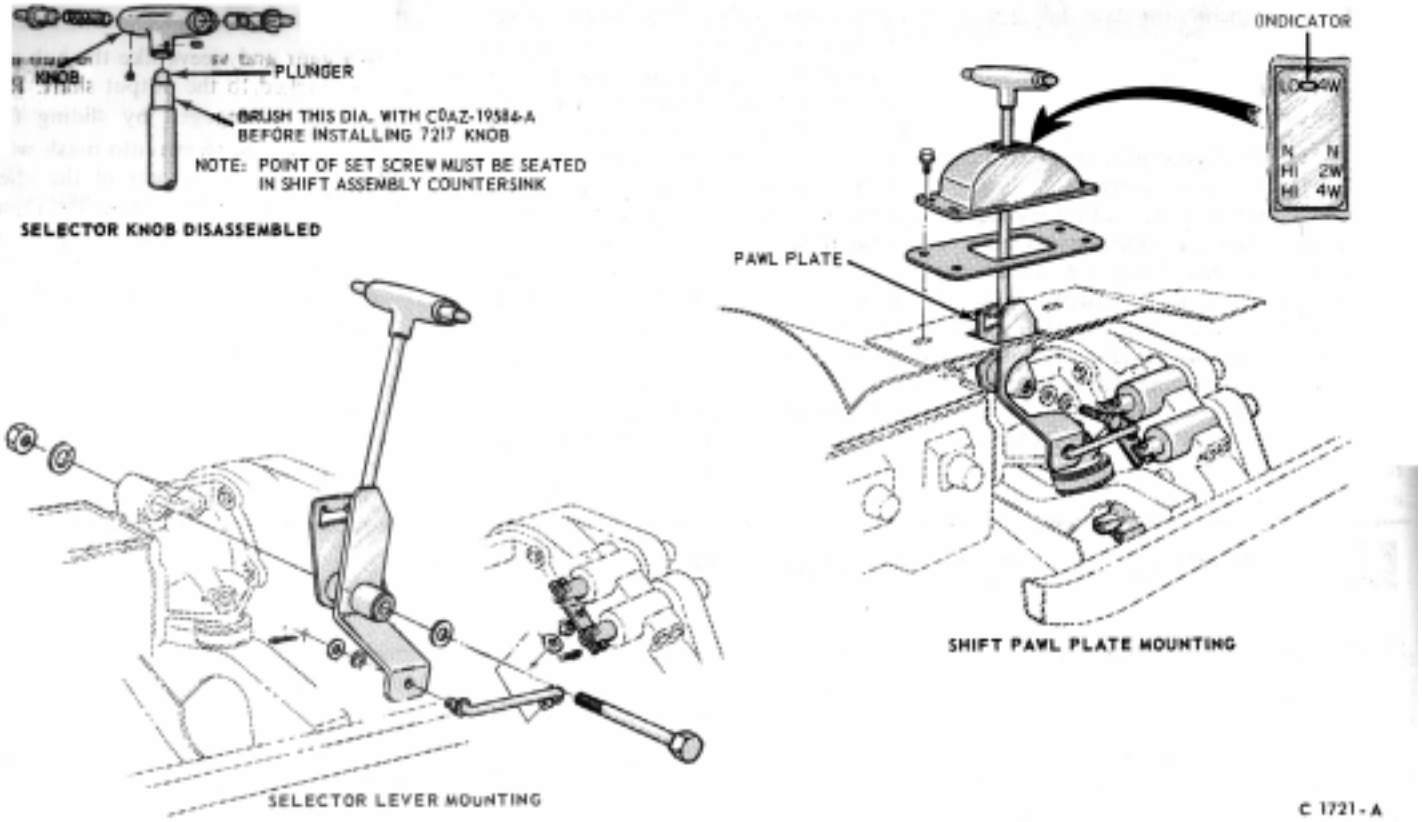

FIG. 5—Shift Lever Details

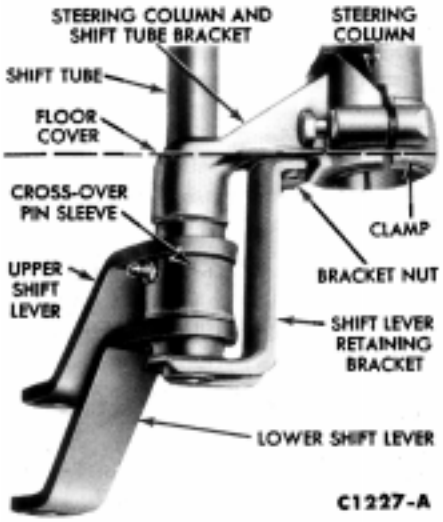

FIG. 6—Steering Column, Shift Tube, Bracket and Shift Levers Disassembled

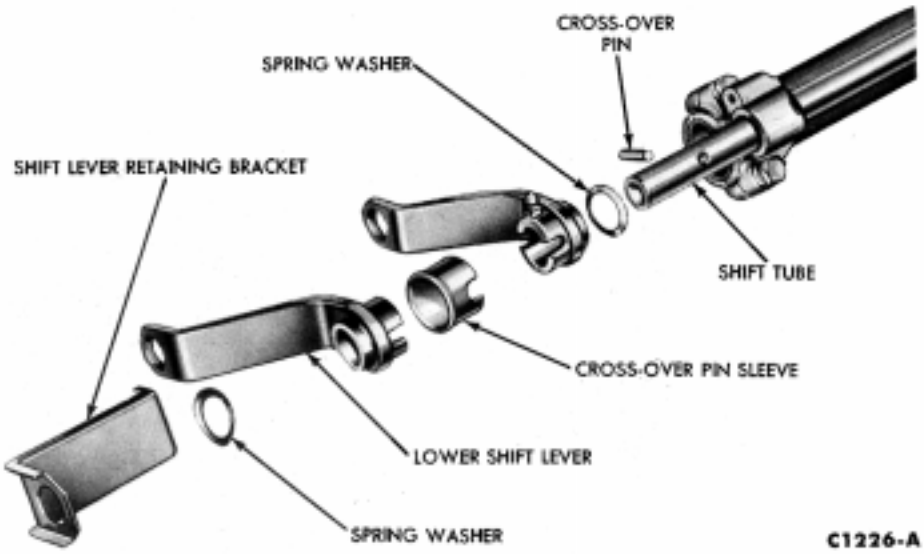

FIG. 7—Shift Levers Disassembled

may be necessary to align the levers to insert the pin.

3. Disconnect the gearshift rods at the transmission shift levers.

4. Adjust the positions of each shift rod adjustment sleeve so that it enters the transmission lever freely. Then, run the sleeves out seven turns and secure the adjustment with the lock nut.

5. Remove the alignment pin from the levers.

6. Secure the gearshift rods to the transmission levers with the retaining clip.

7. Start the engine and shift the selector lever to each position to make sure it operates freely.

TRANSFER SHIFT LEVER ADJUSTMENT

1. Shift the T-handle type selector lever into LO 4W position and raise the vehicle on a hoist.

2. Loosen the pawl plate attaching bolt (Fig. 5).

3. Press inward on the shift rail link (Fig. 5) to be sure that the two shift rails are indexed to their respective detents.

4. Tighten the pawl plate attaching bolt to 20-30 ft-lb.

5. Lower the vehicle and check the shift operation. The pawl assembly must index against the sides of the pawl plate notches in all positions. If the pawl assembly (plunger) requires more travel to lock and unlock easily, remove the T-handle (Fig. 5) and rotate the plunger 1/2 turn counterclockwise.

GEAR SHIFT TUBE REPLACEMENT

ECONOLINE

Removal

1. Disconnect the horn and turn signal wires, and remove the steering wheel.

2. Fold the floor mat back, remove the steering column floor cover retaining screws and the steering column floor cover, and position the rubber weather seal out of the way. Remove the hair pin-type retainers and spring washers that retain the shift rods in the shift levers. Disengage the shift rods from the levers.

3. Disconnect and remove the steering column-to-instrument panel clamp. Remove the two clamp bolts and the clamp that holds the steering column to the floor-mounted bracket (Fig. 6).

4. Remove the selector lever roll pin, and disconnect the selector lever at the selector lever socket.

5. Pull the steering column up just enough to disengage the shift tube at the steering column flange (upper end of column). Remove the worm shaft upper bearing spring and sleeve from the steering column, and remove the upper spring from the shift tube. Slide the steering column from the worm shaft, and remove the shift tube assembly from the truck.

6. Position the shift tube in a vise and remove the bolt that secures the shift lever retaining bracket to the floor-mounted shift tube retaining bracket (Fig. 6). Remove the shift lever retaining bracket and spring washer. Slide the lower shift lever and cross-over pin sleeve from the shift tube (Fig. 7). Remove the cross-over pin, and slide the upper shift lever and spring washer from the shift tube.

Installation

1. Transfer the shift tube retaining bracket from the old shift tube to the new tube. Position the spring washer and upper shift lever on the shift tube, and install the cross-over pin. Position the cross-over pin sleeve, and slide the lower shift lever and spring washer on the shift tube (Fig. 7).

2. Position the shift lever retaining bracket, and install the bolt securing the shift lever retaining bracket to the shift tube retaining bracket (Fig. 6). Place the upper spring in the shift tube and position the shift tube assembly in the vehicle.

4. Position the steering column over the worm gear shaft, and engage the shift tube in the flange as the steering column is being positioned. Insert the selector lever in the socket, and install the roll pin.

5. Position the upper and lower steering column clamps, and install the mounting bolts, Do not tighten the bolts at this time.

6. Rotate the steering column and shift tube bracket to center the shift tube over the top of the steering column tube (centerline of shift tube 1 9/16 inches from steering gear box mounting surface).

7. Check for free rotation of the steering shaft, then tighten the shift tube bracket, steering column support attaching nuts, and the clamp attaching nuts. Re-check the steering shaft again for free rotation. The steering shaft is properly aligned when the shaft does not contact the column bearing inner race. If this is not possible, partial contact with the inner race **during 360° rotation is acceptable.**

8. Position the worm shaft upper bearing sleeve and spring on the steering shaft then install the steering wheel.

9. Check the steering column-to-steering wheel clearance and move the steering column tube downward if an interference exists between the steering wheel and tube. If an adjustment is required, be careful not to disturb the tube centering adjustment.

10. Place the shift rods in the shift lever arms, and secure the rods with the spring washers and hair pin-type retainers. Lubricate the shift lever at the shift tube grease fitting.

11. Position the rubber weather seal, secure the steering column floor cover with the retaining screws, and place the floor mat in position.

12. Connect the horn and turn signal wires. Check the operation of the horn and turn signals.

13. Adjust the shift rod linkage as outlined in this section.

BRONCO

Removal

(Refer to the disassembled view of the steering gear in Group 3).

1. Disconnect the horn and turn signal wires at the steering column connectors located under the instrument panel.

2. Depress the horn button; rotate it counterclockwise and remove the horn button and spring from the steering wheel.

3. Remove the steering wheel attaching nut and remove the steering wheel with Tool 3600-AA.

4. Remove the gear shift lever from the shift lever hub.

5. Remove 2 flange bolt attaching nuts, and pull up on the flange. Remove the spring and centering sleeve from the steering shaft and the flange and shift lever hub from the steering column tube.

6. Pull up on the shift tube and remove if from the steering column.

Installation

1. Position the shift tube over the steering shaft and insert it into the steering column and through the shift levers at the base of the column.

2. Position the shift lever hub on the steering column tube, taking care not to damage the horn and turn signal wires.

3. Position the flange and start the nuts on the bolts about 2 turns.

4. Position the flange to the shift lever hub and the steering column tube while pulling the turn signal and horn wires down through the column.

5. Engage the heads of the 2 flange bolts in the slots of the steering column tube and tighten the flange bolt nuts.

6. Install the gear shift lever in the shift lever hub.

7. Install the centering sleeve, spring, and steering wheel on the steering shaft and install the attaching nut. Torque the nut to specification and apply 2 drops of Loctite sealer (C3AZ-19554-A) to the junction of the steering shaft and nut threads or stake the nut to the shaft.

8. Install the spring and horn button on the steering wheel hub.

9. Connect the turn signal and horn wires at the steering column connectors and check the operation of the horn and turn signals.

10. Check the shift operation through all gears. Adjust the shift linkage as necessary, following the instructions given in this Section.

3 REMOVAL AND INSTALLATION

REMOVAL

ECONOLINE

1. Raise the vehicle on a hoist and drain the lubricant from the transmission.
2. Disconnect the drive shaft from the flange at the transmission. Secure the front end of the drive shaft out of the way with lock wire.
3. Disconnect the speedometer cable from the extension housing, and disconnect the gear shift rods from the transmission shift levers.
4. Position a transmission jack under the engine, and remove the transmission rear support bolts.
5. Lower the engine enough to drop the transmission extension housing from the rear support.
6. Remove the four transmission-to-flywheel housing bolts and remove the transmission.

Do not depress the clutch pedal while the transmission is removed.

INSTALLATION

ECONOLINE

1. Make certain that the machined surfaces of the transmission case and the flywheel housing are free of dirt, paint, and burrs.
2. Install a guide pin in each lower mounting bolt hole.
3. Start the input shaft through the release bearing. Align the splines on the input shaft with the splines in the clutch disc. Move the transmission forward on the guide pins until the input shaft pilot enters the bearing or bushing in the crankshaft. If the transmission front bearing retainer binds up on the clutch release bearing hub, work the release bearing lever until the hub slides onto the transmission front bearing retainer. Install the two transmission-to-flywheel housing upper mounting bolts and lock washers. Remove the two guide pins and install the lower mounting bolts and lock washers. Torque the four mounting bolts to specifications.
4. Raise the jack enough to align the extension housing with the mounting holes in the hanger bracket. Install and torque the attaching bolts to specifications, then remove the jack.
5. Connect the gear shift rods and the speedometer cable.
6. Install the drive shaft, and torque the attaching bolts to specification.
7. Fill the transmission to the level of the filler opening with the lubricant specified in Group 21.
8. Adjust the clutch pedal free travel and shift linkage as required.

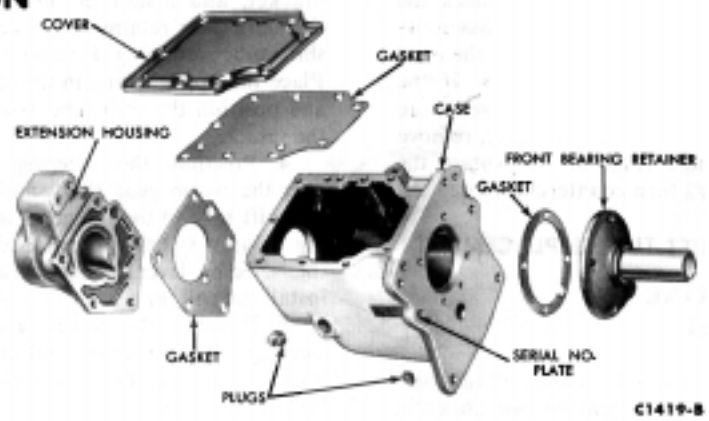

FIG. 8—Transmission Case and Related Parts

REMOVAL

BRONCO

1. Raise the vehicle on a hoist.
2. Support the transfer case shield with a jack and remove the bolts that attach the shield to the frame side rails. Remove the shield.
3. Drain the transmission and transfer case lubricant.
4. Disconnect the front and rear drive shafts at the transfer case (Fig. 2, Part 4).
5. Disconnect the speedometer cable at the transfer case.
6. Disconnect the shift rods from the transmission shift levers. Then place the first-reverse gear shift lever into the first gear position, and insert the fabricated tool (Fig. 2, Part 4). This tool will prevent the input shaft roller bearings from dropping into the transmission case when separating the transfer case from the transmission and output shaft.
7. Cut the lock wire and remove the two bolts, washers, plates, and insulators that secure the crossmember to the transfer case adapter.
8. **Remove the crossmember-to-frame side support attaching bolts.**
9. **Raise the transmission and remove the upper insulators from the crossmember. Remove the crossmember.**
10. Remove the two lower bolts attaching the transmission to the flywheel housing.
11. Disconnect the shift rod from the transfer case shift lever bracket.
12. Remove the bolt that attaches the shift lever bracket to the transfer case adapter, and allow the assembly to hang by the shift lever.
13. Reposition the transmission jack under the transmission and secure with the chain.
14. Remove the two upper bolts securing the transmission to the flywheel housing. Move the transmission and transfer case rearward and downward out of the vehicle.
15. Move the assembly to a bench and remove the transfer case-to-transmission attaching bolts.
16. Slide the transmission assembly off the transfer case.

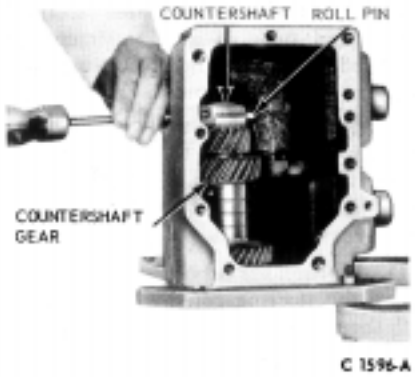

FIG. 9—Removing Countershaft Roll Pin

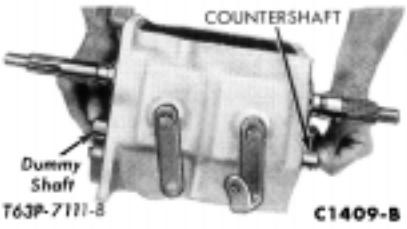

FIG. 10—Removing Countershaft

INSTALLATION

BRONCO

1. Position the transfer case to the transmission and install the attaching

bolts. Torque the bolts to specifications.

2. Position the transmission and transfer case on a transmission jack and secure with the safety chain.

3. Raise the transmission and transfer case assembly into position and install the transmission case to the flywheel housing.

4. Install the two upper and two lower transmission attaching bolts and torque to specifications.

5. Position the shift lever to the transfer case adapter, and install the attaching bolt.

6. Connect the shift rod to the shift lever bracket and secure with the spring washer, flat washer, and cotter pin.

7. Raise the transmission and transfer case high enough to provide clearance for installing the crossmember. Position the upper insulators to the crossmember and install the crossmember-to-frame side support attaching bolts.

8. Align the bolt holes in the transfer case adapter with those in the crossmember, then lower the transmission and remove the jack.

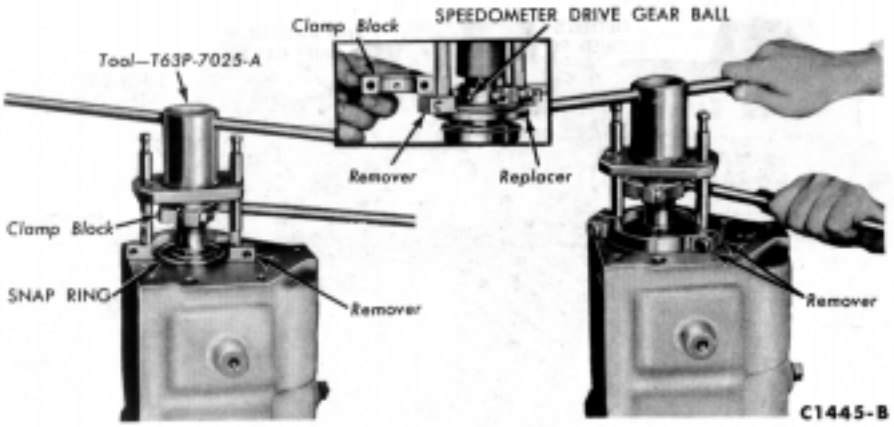

FIG. 11—Removing Output Shaft Bearing

9. Install the crossmember-to transfer case adapter bolts, insulators, plates, and washer. Secure the bolts with lock wire.

10. Remove the fabricated tool, and connect each shift rod to its respective lever on the transmission with a spring washer, flat washer, and cotter pin.

11. Connect the speedometer cable.

12. Install the rear axle drive shaft to the transfer case, and torque the attaching bolts to specifications.

13. Install the front wheel drive shaft to the transfer case, and torque the attaching bolts to specifications.

14. Fill the transmission and transfer case to the proper levels with the recommended lubricant.

15. Position the transfer case shield to the frame side rails, and install the attaching bolts.

4 MAJOR REPAIR OPERATIONS

DISASSEMBLY

1. Mount the transmission in a holding fixture.

2. Remove the nine cap screws that attach the cover to the case. Remove the cover and the gasket (Fig. 8) from the case.

3. On the Econoline model, remove the five cap screws and lock washers that attach the extension housing to the case. Remove the extension and gasket from the case.

4. Remove the four cap screws and lock washers that attach the front bearing retainer to the case. Remove the retainer and gasket from the case.

5. Remove the lubricant filler plug from the right side of the case. Working through the plug opening, drive the roll pin out of the case and countershaft with a 1/4 inch punch (Fig. 9).

6. Hold the countershaft gear with hook and with the tool shown in Fig. 8 push the countershaft out the rear of the case.

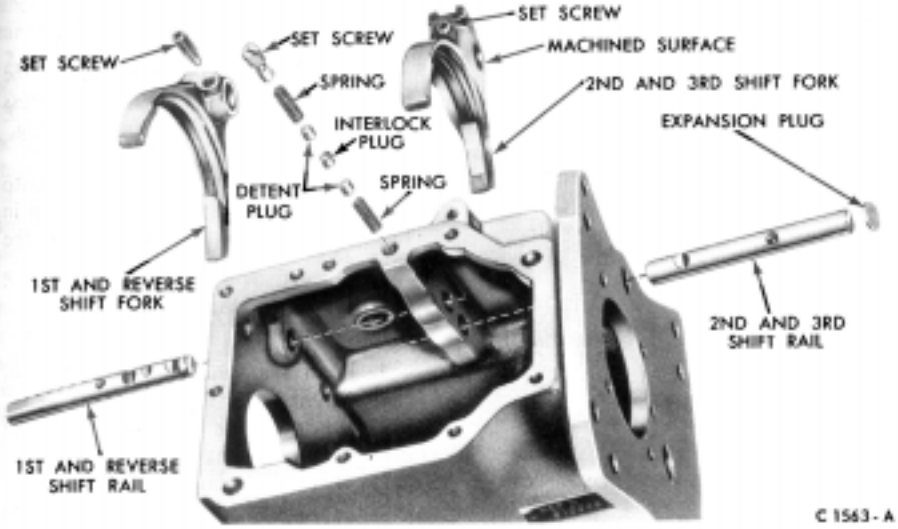

FIG. 12—Shift Rails and Forks Disassembled

The countershaft (cluster) gear and thrust washers (Fig. 14) can be lowered to the bottom of the case. Remove the countershaft from the rear of the case.

7. Remove the snap ring that secures the speedometer drive gear on the shaft. Slide the speedometer drive gear off the output shaft. Remove the speedometer drive gear lock ball from the shaft.

8. Remove the snap ring that retains the output shaft bearing on the shaft. Remove the bearing from the case and shaft as shown in Fig. 9.

9. Place both shift levers in the neutral (center) position.

10. Remove the set screw (Fig. 12) that retains the detent springs and plugs in the case. Remove the detent spring and plug from the case.

11. Remove the set screw that secures the first and reverse shift fork to the shift rail. Slide the first and reverse shift rail out through the rear of the case.

12. Slide the first and reverse synchronizer forward as far as possible, then rotate the first and reverse shift fork upward, then lift it from the case.

13. Move the second and third-speed shift fork to the second speed position to gain access to the set screw. Remove the set screw from the fork. Rotate the shift rail 90° as shown in Fig. 13.

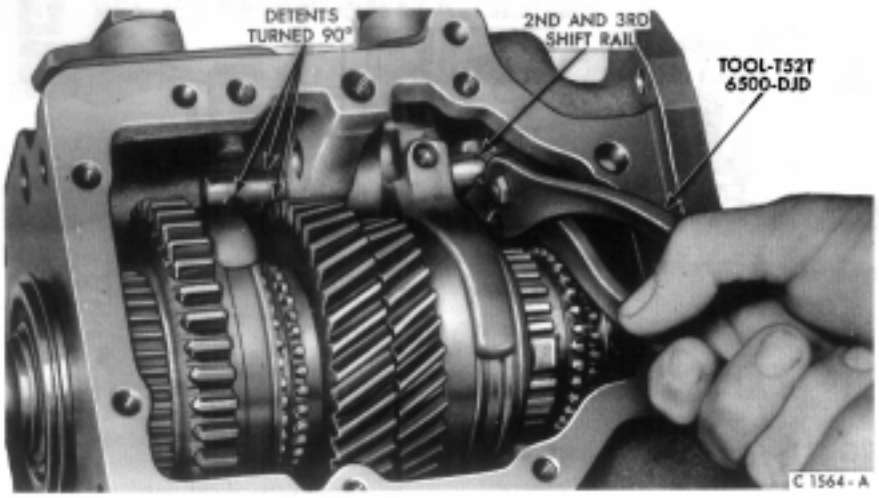

FIG. 13—Rotating Second and Third Speed Shift Rail

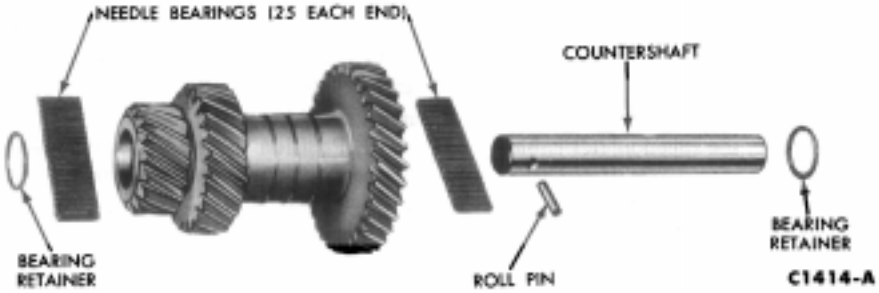

FIG. 14—Countershaft Gear Disassembled

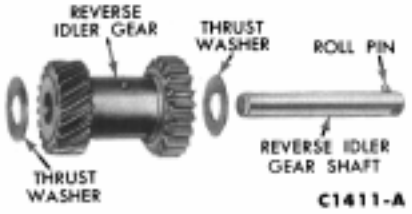

FIG. 15—Reverse Idler Shaft and Gear Disassembled

14. Lift the interlock plug (Fig. 12) from the case with a magnet.

15. Tap on the inner end of the second and third shift rail to remove the expansion plug (Fig. 12) from the front of the case. Remove the shift rail.

16. Remove the second and third-speed detent plug and spring from the detent bore.

17. Pull the input shaft and gear out the front of the case.

18. Rotate the second and third speed shift fork upward, and lift it from the case.

19. Carefully lift the output shaft assembly out through the top of the case.

20. Driving from the front of the case, remove the reverse idler gear shaft. Then, lift the reverse idler gear and two thrust washers (Fig. 15) from the case.

21. Remove the snap ring from the front of the output shaft, then slide the synchronizer and the second-speed gear (Fig. 16) off the shaft.

22. Remove the next snap ring and tabbed thrust washer from the output shaft, and then slide the first-speed gear and blocking ring off the shaft.

23. Remove the next snap ring from the output shaft, and press the reverse gear and sleeve off the shaft.

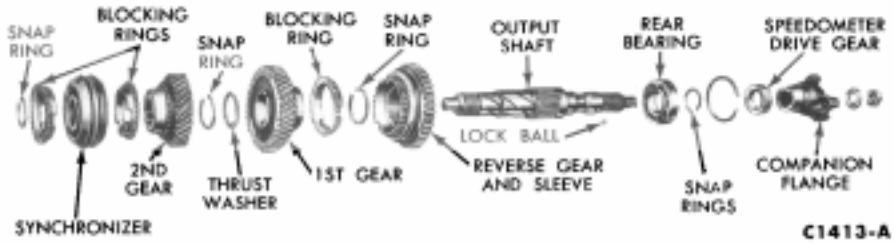

FIG. 16—Output Shaft Disassembled

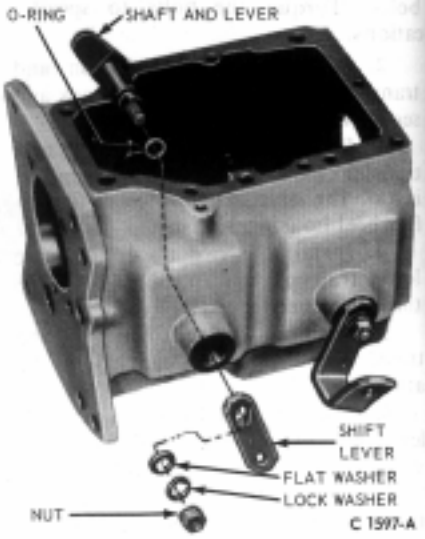

FIG. 17—Shift Lever and Shaft Disassembled

PARTS REPAIR OR REPLACEMENT

SHIFT LEVERS AND SEALS

1. Remove the nut, lock washer and flat washer that secures each shift lever (Fig. 17) to the lever and shaft in the transmission case. Lift the levers off the shafts. Slide each lever and shaft out of the case. Discard the O-ring from each shaft.

2. Lubricate the new seals with transmission lubricant and install them on the shafts.

3. Install the lever and shafts in the case.

4. Position a shift lever on each shaft and secure them with a flat washer, lock washer and nut.

INPUT SHAFT BEARING

1. Remove the snap ring securing the input shaft bearing (Fig. 18), and press the input shaft out of the bearing (Fig. 19).

2. Press the imput shaft bearing onto the input shaft with the tool shown in Fig. 19 and install the snap ring on the shaft.

SYNCHRONIZERS

1. Push the synchronizer hub from each synchronizer sleeve.

2. Separate the inserts and insert springs from the hubs. Do not mix the parts from the second and third-speed synchronizer with the first and reverse synchronizer (Figs. 20 and 21).

3. Install the rear insert spring (Fig. 22) in the groove of the first and reverse

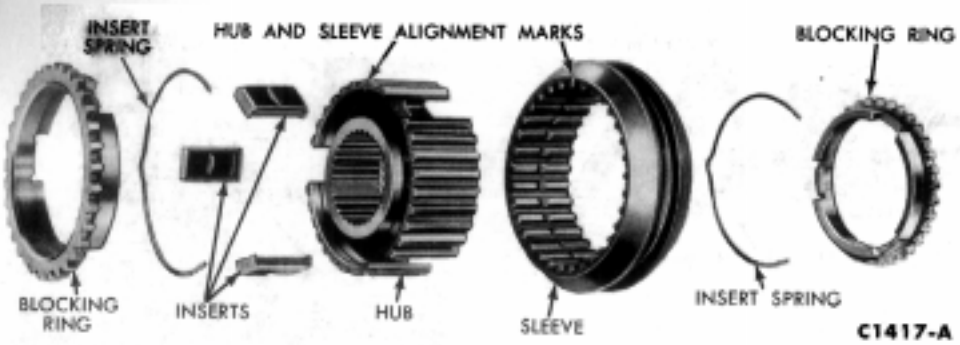

FIG. 21—Second and Third Synchronizer—Disassembled

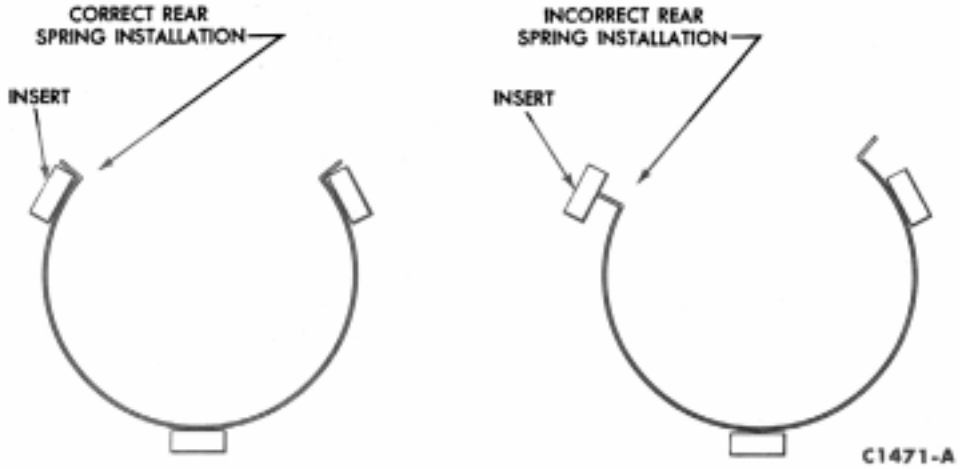

FIG. 22—First and Reverse Speed Synchronizer Insert Spring Installation

the second-speed position (toward rear of transmission). Align the fork and install the second and third-speed shift rail. It will be necessary to depress the detent plug to enter the rail in the bore. Move the rail inward until the detent plug engages the forward notch (second-speed position).

12. Secure the fork to the shaft with the set screw. Move the synchronizer to the neutral position.

13. Install the interlock plug in the case. If the second and third shift rail is in the neutral position, the top of the interlock will be slightly lower than the surface of the first and reverse shift rail bore.

14. Move the first and reverse synchronizer forward to the first-speed position. Place the first and reverse shift fork in the groove of the first and reverse synchronizer. Rotate the fork into position and install the first and reverse shift rail. Move the rail inward until the center notch (neutral) is aligned with the detent bore. Secure the fork to the shaft with the set screw. Install the remaining detent plug and spring. Secure the detent spring with the slotted head screw. Turn the set screw until the head is flush to 0.020 inch below the top of the case.

15. Install a new expansion plug in the case.

16. Hold the input shaft and blocking ring in position, and then move the output shaft forward to seat the pilot in the roller bearings of the input gear.

17. Tap the input gear bearing into place in the case while holding the output shaft to prevent the roller bearings from dropping. Install the front bearing retainer and new gasket, making sure that the oil return slot is at the bottom of the case. Install and torque the four attaching screws to 30-36 ft-lbs.

18. Install the large snap ring on the rear bearing. Place the bearing on the output shaft with the snap ring end toward the rear of the shaft. Press the bearing into place with the tool shown in Fig. 23. Secure the bearing to the shaft with a snap ring.

19. Hold the speedometer drive gear

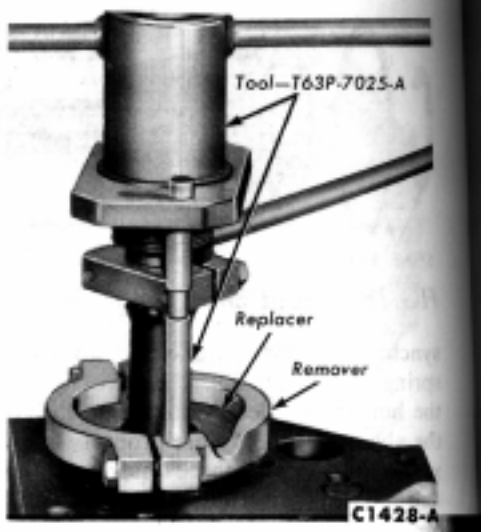

FIG. 23—Installing Output Shaft Rear Bearing

lock ball in the detent and slide the speedometer drive gear into place. Secure the gear with a snap ring.

20. Place the transmission in the vertical position. Working through the drain hole in the bottom of the case, align the bore of the countershaft gear and the thrust washers with the bore of the case with a screwdriver.

21. Working from the rear of the case, push the dummy shaft out of the countershaft gear with the countershaft. Before the countershaft is completely inserted in the bore, make sure that the hole that accommodates the roll pin is in alignment with the hole in the case. Push the countershaft into place and install the roll pin.

22. Coat a new extension housing gasket with sealer and position it on the case.

23. Install lock washers on the five attaching screws. Dip the threads of the cap screws in sealer. Secure the housing to the case and torque the cap screws to 42-50 ft-lbs.

24. Install the filler and drain plugs in the case. Make sure that the magnetic plug is installed in the bottom of the case.

25. Place the transmission in gear. Pour lubricant over the entire gear train while rotating the input or output shaft.

26. Coat a new cover gasket (Fig. 8) with sealer. Secure the cover with nine cap screws. Torque the screws to 14-19 ft-lbs.

27. Check the operation of the transmission in all of the gear positions.

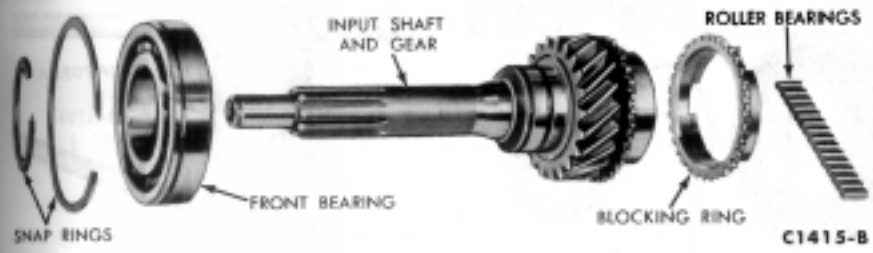

FIG. 18—Input Shaft Gear Disassembled

synchronizer hub. Make sure that the spring covers all insert grooves. Start the hub in the sleeve making sure that the alignment marks are properly indexed. Position the three inserts in the hub making sure that the small end is over the spring and that the shoulder is on the inside of the hub. Slide the sleeve and reverse gear onto the hub until the detent is engaged. Install the front insert spring in the hub to hold the inserts against the hub.

4. Install one insert spring (Fig. 21) into a groove of the second and third speed synchronizer hub, making sure that all three insert slots are fully covered. With the alignment marks on the hub and sleeve aligned, start the hub into the sleeve. Place the three inserts on top of the retaining spring and push the assembly together. Install the remaining insert spring, so that the spring ends cover the same slots as does the other spring. Do not stagger the springs. Place a synchronizer blocking ring on each end of the synchronizer sleeve.

COUNTERSHAFT GEAR BEARINGS

1. Remove the dummy shaft, 50 roller bearings, and the two bearing retainer washers from the countershaft gear (Fig. 14).

2. Coat the bore in each end of the countershaft gear with grease.

3. Hold the dummy shaft in the gear and install the 25 roller bearings and retainer washer in each end of the gear.

4. Position the countershaft gear, dummy shaft, and roller bearings in the case.

5. Place the case in a vertical position. Align the gear bore and the thrust washers with the bores in the case and install the countershaft.

6. Place the case in a horizontal position and check the countershaft gear end play with a feeler gauge. The end play should be 0.004-0.018 inch. If not within these limits, replace the thrust washer.

7. After establishing the correct end play, install the dummy shaft in the countershaft gear and allow the gear to remain at the bottom of the case until the output and input shafts have been installed.

ASSEMBLY

1. Coat the reverse idler gear thrust surfaces in the case with a thin film of lubricant and position the two thrust washers in place.

2. Position the reverse idler gear and dummy shaft in place. Align the gear bore and thrust washers with the case bores and install the reverse idler shaft.

3. Measure the reverse idler gear end play with a feeler gauge. End play should be 0.004-0.018 inch. If the end play is not within limits, replace the thrust washers. If the end play is within limits, leave the reverse idler gear installed.

4. Lubricate the output shaft splines and machined surfaces with transmission lubricant.

5. Position the first and reverse gear and sleeve (Fig. 16) in an arbor press with the spur-type teeth facing up. Press the output shaft into the hub. Secure it in place with a snap ring.

6. Place a blocking ring on the tapered machined surface of the first-speed gear.

7. Slide the first gear onto the output shaft with the blocking ring toward the rear of the shaft. Rotate the gear as necessary to engage the three notches in the blocking ring with the synchronizer inserts. Secure the first gear with the thrust washer and snap ring.

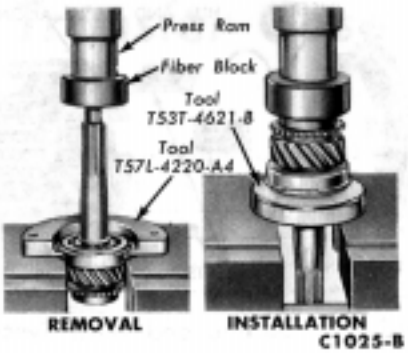

FIG. 19—Replacing Input Shaft Bearing

8. Place a blocking ring in the tapered machined surface of the second-speed gear. Slide the second gear with blocking ring and the second and third gear synchronizer onto the mainshaft. The tapered machined surface of the second gear must be toward the front of the shaft. Make sure that the notches in the blocking ring engage the synchronizer inserts. Secure the synchronizer with a snap ring.

9. Coat the bore of the input shaft and gear with a thin film of grease. **A thick film of grease will plug the lubrication holes and prevent lubrication to the bearings.** Install the 15 bearings (Fig. 18) in the bore.

10. Position the output shaft assembly in the case. Position the second and third shift fork on the second and third-speed synchronizer.

11. Place a detent plug spring and a plug in the case (Fig. 12). Place the second and third-speed synchronizer in

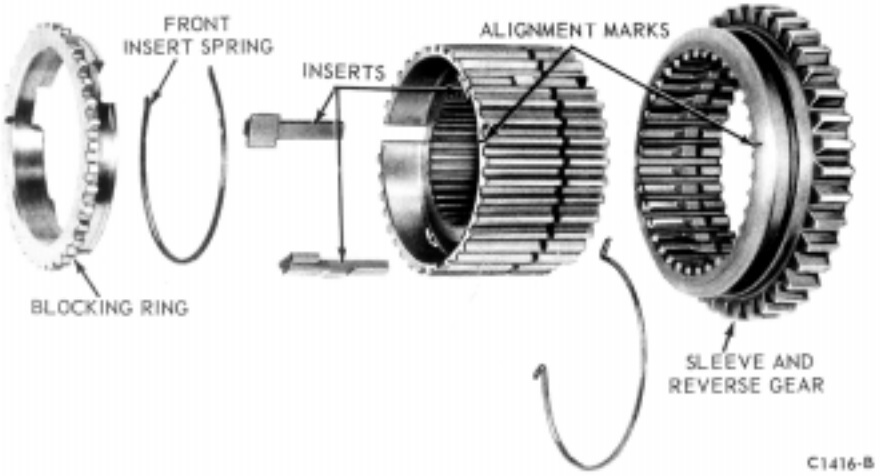

FIG. 20—First and Reverse Synchronizer —Disassembled