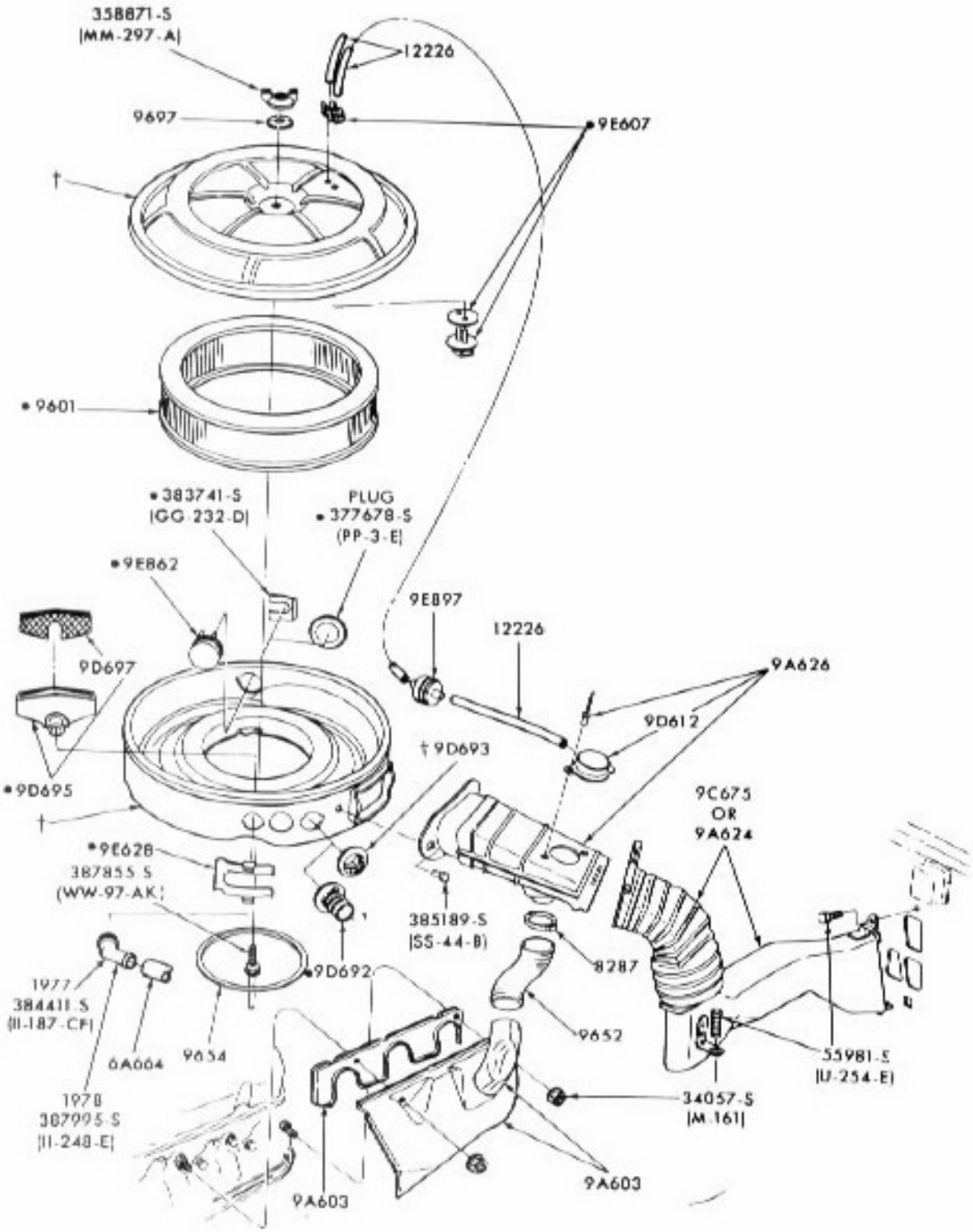

•ALSO SERVICED IN 9600 AIR CLEANER ASSY.
†SERVICED ONLY IN 9600 AIR CLEANER ASSY.

P-13437

AIR CLEANER and RELATED PARTS (DRY TYPE)
1978/ BRONCO--8 CYL. 351M, 400

COPYRIGHT ©1984 — FORD MOTOR COMPANY — DEARBORN, MICHIGAN